DOCUMENT TITLE:

SERVICE AND INSTALLATION RULES

DOCUMENT NO R841316

DS-I-CA-01

REV NO.	DATE	REVISION DESCRIPTION	APPROVAL
4	Oct 2014	Revise and Update	Metering Asset Strategy Team Leader
4.1	Nov 2014	Minor Changes	Metering Asset Strategy Team Leader
5.0	Nov 2017	Power of Choice Review	Asset Strategy Team Leader
5.1	Sept 2018	“Main Switch” Changes and Stratum Issues	Secondary Asset Strategy Team Leader
6.0	September 2018	Published and Approved	Secondary Asset Strategy Team Leader
7	July 2019	Published and Approved	Network Asset Strategy Team Leader

TABLE OF CONTENTS

Service and Installation Rules **5**

1. INTRODUCTION **6**
1.1 Purpose 6
1.2 Effective date 6
1.3 Scope 6
1.4 Administration 6
1.5 Enquiries 11

2. Responsibilities **13**
2.1 Customer responsibilities 13
2.2 *TasNetworks* responsibilities 13
2.3 *Metering Provider* responsibilities 13
2.4 Retailer responsibilities 14
2.5 Electrical Contractor responsibilities 14
2.6 Electrical Consultant responsibilities 14
2.7 Connection and metering asset ownership 15
2.8 Installation and maintenance responsibilities 15

3. Electricity supply **19**
3.1 Supply availability and quality 19
3.2 Supply voltages 19
3.3 Power factor 19
3.4 Rating of consumer mains 20
3.5 Electrical interference 21

4. Electrical installation requirements **22**
4.1 Installation requirements 22
4.2 Earthing 22
4.3 Testing 22
4.4 Embedded generators and batteries 23
4.5 Labelling 23

5. Connection arrangements **24**
5.1 Compliance 24
5.2 Certificate of Compliance 24
5.3 Connection agreement 24
5.4 Licensed Electrical Worker 24
5.5 Unauthorised work 24
5.6 Access to supply address 24
5.7 Prohibited connections 25
5.8 Safety 26
5.9 Point of supply requirements 26
5.10 Private high-voltage line 27
5.11 Multiple points of supply 27
5.12 Stratum titled developments 28
5.13 Position of *Customer*'s connection assets 28
5.14 Requirement to supply via a turret, service box or cabinet 30
5.15 Requirement to install a *TasNetworks* service pole 30
5.16 Requirement to install private service poles 30

6. Connection process **32**
6.1 Requesting electrical works 32
6.2 Connection arrangements 32
6.3 Connection application procedure 36
6.4 Reconnection request 36
6.5 Connection works processes 37

7. Overhead connection requirements **39**
7.1 Clearances 39
7.2 Service poles 39
7.3 Conductor maximum span lengths 40

7.4 Service hook or raiser bracket 40
7.5 Installing consumer underground mains on a *TasNetworks* service pole .. 41
7.6 Vegetation management 43
8. Underground supply requirements 44
8.1 Installing consumer mains in a *TasNetworks* underground asset 44
8.2 Consumer mains conduit 44
8.3 Security 44
8.4 Installing to a temporary meter/switchboard position 44
9. Metering installation requirements 46
9.1 General 46
9.2 High voltage metering 47
10. Unmetered supply 48
10.1 Unmetered supply excluding public and contract lighting 48
10.2 Public and private contract lighting 49
Appendix A Electrical Works Request 50
A.1 Submitting an *EWR* 50
Appendix B Related Australian Standards 51
Appendix C Minimum clearances 53
C.1 Clearance to ground and structures 53
C.2 Clearance to other lines 57
Appendix D Service poles 58
Appendix E Attachment heights 61
E.1 Low voltage attachment heights for *TasNetworks* pole assets 61
Appendix F Maximum spans 62
F.1 Maximum spans for unstayed termination pole 62
F.2 Maximum spans for unstayed fascia/raiser bracket termination 64
F.3 Maximum spans for unstayed intermediate service pole 125x125x5 mm .. 68
Appendix G Service attachment 74
Appendix H Overhead supply to underground consumer mains 79

TABLES

Table 1 Connection asset responsibilities 17
Table 2 Power factor requirements 19
Table 3 Prospective fault current at connection point 20
Table 4 Service fuse rating 20
Table 5 Point of supply arrangements 33
Table 6 Consumer mains arrangements 33
Table 7 Connection application resubmission procedure 37

FIGURES

Figure 1 Prohibited connections 25
Figure 2 Service pole arrangements 29
Figure 3 Common single-tenant connection arrangements 34
Figure 4 Common stratum-title supply arrangements 35
Figure 5 Common multiple tenancy supply arrangements 36
Figure 6 Connection responsibilities 37
Figure 7 Tasmanian electricity connection flowchart 38
Figure 8 Maximum angle of service attachment 41
Figure 9 Vegetation clearance 43
Figure 10 Permanent supply in a temporary position 45

Service and Installation Rules

For connection to the electricity distribution network in Tasmania

Authorised when accessed at www.tasnetworks.com.au.

All copies of this document, including print and electronic, are uncontrolled.

1. INTRODUCTION

1.1 Purpose

Tasmanian Networks Pty Ltd (*TasNetworks*) owns and operates the electricity distribution network on mainland Tasmania. This *Service and Installation Rules (SIR*) defines the requirements for connecting to the *TasNetworks* distribution network. Compliance with this document will avoid delays in approving connection requests. This document is intended for contractors, designers, consultants, manufacturers and customers involved in the design, installation, testing and servicing of connections to the distribution network.

1.2 Effective date

This edition is effective from 10 September 2018 until superseded.

1.3 Scope

These Service and Installation Rules (*SIR or rules*) explain the connection process and defines the rules that apply to all types of *points of supply* and *consumer mains* arrangements. These *rules* apply to:

- Connecting to the *TasNetworks* distribution network
- *TasNetworks* low-voltage electricity supply
- Servicing arrangements
- Legacy *TasNetworks* metering installed prior to 1 December 2017

The following subject areas are beyond the scope of these *rules*:

- *Customer* installations beyond the *TasNetworks* point of supply
- Electrical licensing and requirements
- High-voltage supply
- General metering standards and retailer metering requirements

1.4 Administration

TasNetworks administers the development, revision and publication of this standard.

Although regulations are usually the catalyst for revision, users and interested parties are invited to provide comments and suggestions at any time and can be sent to serviceandinstallationrules@TasNetworks.com.au.

Revisions to the rules are published quarterly on the *TasNetworks* website. It is the user's responsibility to ensure that they have a current copy of these rules. All copies, including print and electronic, are uncontrolled. Check the website to ensure you have the latest copy.

1.4.1 Abbreviations

Abbreviation or symbol	Term
A	Ampere (amp)
AEMC	Australian Energy Market Commission
CBL	Conductor designated breaking load
CBOS	Consumer Building and Occupational Standards
CEC	Certificate of Electrical Compliance
DOJ	Department of Justice
DSG	Department of State Growth
EC	Electrical Contractor

Abbreviation or symbol	Term
ENA	Energy Networks Association
EWR	Electrical Works Request
HV	High voltage
kN	KiloNewton
LV	Low voltage
MEN	multiple earthed neutral
MP	Metering Provider
NECF	National Energy Customer Framework
NER	National Electricity Rules
POA	Point of attachment
POS	Point of supply
SIR	Service and Installation Rules
SWER	Single wire earth return
TEC	Tasmanian Electricity Code
UG	Underground
V	Volt

1.4.2 Interpretation

The following words have specific meanings:

Term	Meaning
Must	There is an absolute requirement to observe the behaviour.
Must not	There is an absolute prohibition on the behaviour.
Should	The behaviour is recommended or encouraged but there might be valid circumstances for adopting a different behaviour.
Should not	The behaviour is not recommended or is discouraged but there might be valid circumstances for adopting the behaviour.
Might or may	The behaviour is optional.

1.4.3 Sources of information

Source	Website
Consumer Building and Occupational Standards (CBOS)	www.justice.tas.gov.au/building/electrical_standards
Electrical Standards and Safety (ESS)	http://www.justice.tas.gov.au/building
TasNetworks	www.tasnetworks.com.au

Office of the Tasmanian Energy Regulator (OTTER)	www.energyregulator.tas.gov.au
Department of Justice (DOJ)	www.justice.tas.gov.au/building/electrical_standards/electrical_safety_legislation
Wiring Rules	www.wiringrules.com.au
Energy Networks Association (ENA)	www.ena.asn.au
Standards Australia	www.standards.org.au
SAI Global	infostore.saiglobal.com/store
Australian Energy Market Commission (AEMC)	www.aemc.gov.au
Department of State Growth (DSG)	www.stategrowth.tas.gov.au

1.4.4 Acts, Regulations and Standards

Note: A comprehensive list of related Australian Standards is provided in Appendix B.

These *rules* have been developed in accordance with the following legislation and industry standards. All references to standards are to the latest published editions.

Abbreviation	Title	Source
TEC	Tasmanian Electricity Code	OTTER
ESI Act	Electricity Supply Industry Act 1995	DSG
EISA Act	Electricity Industry Safety and Administration Act 1997	DSG
EISAR	Electricity Industry Safety and Administration Regulation 1999	DSG
–	Occupational Licensing Act 2005	DOJ
OLEWR	Occupational Licensing (Electrical Work) Regulations 2008	CBOS
NER	National Electricity Rules	AEMC
AS/NZS 3000	AS/NZS 3000 Electrical installations – buildings, structures and premises (“Wiring Rules”)	SAI Global
NERL	National Electricity Retail Law (gives effect to the NECF)	AEMC
AS/NZS 3017	AS/NZS 3017 Electrical installations – testing guidelines	SAI Global
AS/NZS 7000	AS/NZS 7000 Overhead line design – detailed procedures	SAI Global
AS/NZS 60269	AS/NZS 60269 Low voltage fuses – fuses with enclosed fuse links (parts 1 & 3)	SAI Global
AS/NZS 61000.3	AS/NZS 61000.3 Electromagnetic compatibility (EMC): Part 3 Limits	SAI Global

1.4.5 Precedence

Where conflicting requirements or details are provided in the referenced rules or standards, the following order of precedence applies:

1) Laws, Government regulations and codes (NER, ESI Act, TEC, etc.)
2) *TasNetworks* Service and Installation Rules (this document)
3) For overhead lines, the most onerous of AS/NZS 3000 or AS/NZS 7000
4) AS/NZS 3000
5) Other electrical standards and codes of practice
6) Building codes of practice and other industry standards

1.4.6 Definitions

The definitions below apply to this *Service and Installation Rules* and might vary from definitions contained in other documents.

Convention. Terms defined by legislation or regulation and titles of published documents are capitalised (e.g. Electrical Worker). Terms defined in this standard are shown in italic (e.g. *authorised contractor*). If not in italic, use of the term is generic.

Authorised Contractor means an electrical contractor authorised in writing by *TasNetworks* to perform work on specified assets.

Cable means an electrical conductor.

Certificate of Electrical Compliance (CEC) refers to the electrical certificate of compliance that must be submitted to certify that work undertaken has been performed in accordance with relevant legislation and standards.

Connection Agreement is a contract between a customer and *TasNetworks* for the provision of connection services provided by *TasNetworks* to a customer.

Conduit means the protective casing that encloses an electrical conductor.

Connection Assets means the physical assets used to connect to electrical installations.

Connection Alteration refers to an alteration to an existing connection including an addition, upgrade, extension, expansion, augmentation or any other kind of alteration — for example, mains upgrades (including single to multi-phase) or switchboard relocations.

Connection Condition or ***Condition*** refers to the conditions of connection listed in Section 5 of the *TasNetworks* Service and Installation Rules

Consumer Mains means the *customer's* mains wiring between the *point of supply* and the customer's mains switchboard.

Consumer see *customer*.

Contractor see *Electrical Contractor*.

Customer is a person who engages in the activity of purchasing electricity supplied through a distribution system to a *point of supply*. For the purpose of these rules, this includes a *developer*.

Customer Charter is the document that describes the obligations and commitments of *TasNetworks* to its customers regarding its standard of service.

Developer is a person other than *TasNetworks* who engages in the construction of electricity infrastructure.

Distribution Network means the apparatus, equipment, plant and buildings owned, operated or controlled by *TasNetworks* and used to convey and control the conveyance of electricity to its distribution customers (whether wholesale or retail), excluding any *connection assets*.

Distributor means the Distribution Business of Tasmanian Networks Pty Ltd (ABN 24 167 357 299) 1–7 Maria Street, Lenah Valley Tasmania.

Electrical Contractor is as defined in *Occupational Licensing Act 2005*.

Electrical Contractors Licence means a licence issued to an individual who meets the criteria of *Electrical Standards and Safety* and holds a current Tasmanian Electrical Technicians Licence and complies with the *Occupational Licensing Act 2005*.

Electrical Installation is a set of wires, fittings, equipment that is connected to the Network.

Electrical Standards and Safety is a division of the Department of Justice.

Electrical Work is as defined in *Occupational Licensing Act 2005*.

Electrical Worker is as defined in *Occupational Licensing Act 2005*.

***Electrical Works Request* (*EWR*)** is a *TasNetworks* document that is used to provide accurate information and is submitted by contractors when a change is required to a connection and / or metering at a customer's installation.

High Voltage or ***High-Voltage*** means a voltage greater than 1,000 volts AC.

Installation Owner means the person or body who owns the property in which an electrical connection is made and this may be different to the customer.

Low Voltage or ***Low-Voltage*** means a voltage greater than 50 volts AC, not exceeding 1,000 volts AC.

Main Switch the primary function of which is the isolation of a supply of electricity to electrical installation and the point at which TasNetworks connects supply to and performs connection point energisation tests

Meter Provider a person or business engaged to install meters on an installation as directed by a *Retailer*.

National Energy Customer Framework (NECF) is a national regime that regulates the sale and supply of electricity and gas to customers, designed to harmonise energy consumer protections across participating state and territories. Refer to <http://www.industry.gov.au/Energy/EnergyMarkets/Pages/NationalEnergyCustomerFramework.aspx>.

New Connection refers to a connection established or to be established, in accordance with this standard and applicable energy laws, where there is no existing connection—for example, greenfield installations, stratum title connections, or reconnection of abolished sites.

***Point of Attachment* (POA)** means the point at which a *TasNetworks* service wire is physically anchored on a customer's building, pole or structure.

***Point of Supply* (POS)** means the point at which *TasNetworks*' distribution network connects to privately owned assets or equipment that serve the premises of one or more customers.

Pole ID is the unique *TasNetworks* 6-digit identification number on a service pole.

Premises see *property*.

Property means a parcel of freehold or leasehold land, or Crown Land held under lease or licence, which may be traversed within its boundaries without crossing a public reserve (including road reserve) or land owned by or vested in a separate person or body.

Private Pole or ***Private Service Pole*** means any pole or structure that does not belong to *TasNetworks*.

Retail Supply Contract is between a customer and a Retailer for the sale of electricity.

Retailer is a person who sells electricity.

Safe includes, but is not limited to, conforming to the *Wiring Rules* at the original date that each portion of the wiring was installed.

Service or ***Service Wire*** or ***Service Cable*** means the first span of *low-voltage* conductor from the *TasNetworks*' distribution network (including any *TasNetworks* service poles) to a *POS*. The *service* does not include the supporting pole or structure at the *point of supply*.

Service and Installation Rules (SIR) is this document.

Service Pole means a pole installed to provide an intermediate support for the service cable or to improve ground clearances.

TasNetworks means Tasmanian Networks Pty Ltd, ABN 24 167 357 299, 1–7 Maria Street, Lenah Valley Tasmania.

TasNetworks Meter means any meter owned by TasNetworks (usually identifiable by a label stating "HEC", "Property of Hydro", "Aurora" or "TasNetworks").

Tee-Up is a process that requires TasNetworks to undertake specific work at a property on a specific date or time with a third party.

Wiring Rules is the document titled *AS/NZS 3000:2007 Electrical installations – buildings, structures and premises*.

1.5 Enquiries

Note that it is the responsibility of the *contractor* or *customer* to ensure that the information submitted to *TasNetworks* is complete and accurate and that all necessary approvals have been obtained before commencing connection works.

1.5.1 Technical Advice

Only to be used if the information is not available in the standard documentation available to all contractors.

Service installation	Compliance and Audit Team	1300 300 545
Power quality	Compliance and Audit Team	1300 300 545
Public and private lighting new or existing lighting only (not faults)	Network Customer Supply	1300 13 7008

1.5.2 Negotiated connections

Where infrastructure or design work is required, including crossover poles, contact:

Network Customer Supply	
Phone	1300 13 7008
Postal address	PO Box 419, Launceston TAS 7250
Email	networkcustomersupply@tasnetworks.com.au

1.5.3 Contacts

General Enquiries	Website	www.tasnetworks.com.au
Emergency and Faults	Fault Call Centre	132 004
General Service Connection Enquiries	Network Customer Supply	1300 13 7008
Tee-up with *TasNetworks* at a Site	Submit *Electrical Works Request (EWR)*	See Section 0
Reconnection after Long-Term Disconnection (6 months or greater)		Contact *Retailer*
Disconnect, Reconnection or Connection to an Existing *TasNetworks* Overhead or Underground Service		Contact *Retailer*

1.5.4 Forms

All forms can be obtained from:

https://www.tasnetworks.com.au/forms

2. RESPONSIBILITIES

TasNetworks cannot connect the electricity supply to a Customer's installation until the *Customer* has selected a *Retailer* and the *Retailer* has requested the connection.

2.1 Customer responsibilities

The ***Customer*** is responsible for:

- Selecting an electricity *Retailer*.
- Where applicable, negotiating or nominating an agent to negotiate provision of the electricity supply with *TasNetworks*.
- Contacting their *Retailer* when advised by an *Electrical Contractor*.
- Ensuring that vegetation is removed or trimmed to provide clear access to, and safe clearance (including regrowth space) from, any existing or planned overhead power lines.
- Providing an accessible and safe working environment.
- Ensuring the meter enclosure is accessible at all times and when the *TasNetworks* meters are still being manually read and are behind a locked gate, ensuring that the gate is fitted with the *TasNetworks* metering lock.
- Ensuring the meter enclosure is clear of vegetation and that a meter reader can read the meter without stepping on or damaging valuable plants etc.
- Ensuring that the connection point is clear at all times to allow safe access by *TasNetworks* personnel.
- Ensuring any *private poles* or other private electricity assets owned or used by the *customer* are regularly inspected, maintained, and continue to be safe and conform with these rules and any applicable laws, regulations and standards.
- Notifying the *Retailer* or *TasNetworks* when supply is to be permanently disconnected from premises (supply abolishment).

  The c*ustomer* may also be the Installation Owner.

2.2 *TasNetworks* responsibilities

TasNetworks is responsible for:

- Negotiating provision of the electricity connection with the *customer* or the *customer's* agent (generally an *Electrical Contractor*).
- Transporting and delivering the electricity purchased by retailers and sold to customers.
- For the connection from the distribution network to the customer point of supply and the connection at the point of supply
- Examining and testing the consumer's mains to the Main Switch before it is initially connected to *TasNetworks*' electricity network.
- Energising supply to the line side of the Main Switch leaving the Main Switch in the off position
- TasNetworks is **NOT** responsible for any works after the Main Switch
- Fulfilling the responsibilities of the *Metering Provider* when *TasNetworks* meters are installed in a site.
- Maintaining existing external load control devices.
- The reliability and quality of the electricity supply at the connection point.
- Issuing NMIs.

2.3 *Metering Provider* responsibilities

The ***Metering Provider*** must be accredited by AEMO and is responsible for:

- When appointed by the *Retailer* or *customer*, supplying, installing and maintaining the metering equipment on a customer's premises.

- Ensuring all *customer* energy is metered (with the exception of unmetered supplies) and notifying *TasNetworks* by the appropriate notification form of any unmetered circuits identified.
- Any works and/or testing after the Main Switch
- Notifying *TasNetworks* immediately and ceasing any work if evidence of tampering of metering or control equipment is detected.
- Retaining load control equipment where the c*ustomer* requires controlled tariffs.
- Complying with *TasNetworks* requirements for installation, sealing and testing of *TasNetworks* owned metering equipment.
- Where the Metering Provider is not *TasNetworks*, notifying *TasNetworks* by the appropriate process prior to conducting any onsite works.
- Where *customer* outages are required, utilising the *TasNetworks* outage notification process.
- Attaching a label to the metering installation detailing the NMI, the Metering Provider name and contact details.
- Ensuring that all safety and security requirements are maintained for metering installations.
- Ensuring safe work practices for the handling of asbestos are used when affixing any equipment to a meter panel containing asbestos.
- Inspecting and confirming that the connection point is compliant with this *SIR* and safety requirements, and issuing corrective action notices if defects exist.

2.4 Retailer responsibilities

The ***Retailer*** is responsible for:

- Ensuring metering is installed in accordance with the NER.

2.5 Electrical Contractor responsibilities

The ***Electrical Contractor*** is responsible for:

- Ensuring all Electrical Work is in accordance with Tasmanian Law, AS/NZS 3000 (Wiring Rules), other relevant standards and the requirements of the *SIR*.
- Where exceptional circumstances occur, ensuring that permission is obtained by submitting a written request to *TasNetworks* for a variation.
- Installation of consumers mains from the point of supply to the main switch ready for connection
- Connecting any sub-mains after the Main Isolation Switch on multi tenancy sites
- Ensuring that *TasNetworks* is advised when there is a significant increase in the electrical load at an installation.
- Advising the c*ustomer* when increases in load require changes to the *electrical installation* including meter changes.
- Not working on or removing *TasNetworks* metering equipment without permission.
- On completion of Electrical Work that involves a change to a connection or to its metering, submit and *Electrical Works Request* (*EWR*) once work is completed.
- Issuing a *Certificate of Electrical Compliance*.
- Submitting appropriate forms in a timely manner and ensuring that the information on the forms is accurate (e.g. correct address).
- Rectifying any departures from this manual that have been identified by *TasNetworks*.

2.6 Electrical Consultant responsibilities

The **Electrical Consultant** is responsible for:

- Designing the electrical installation in accordance with Tasmanian Legislation, AS/NZS 3000 (Wiring Rules), other relevant standards, and this *SIR*.

- Where exceptional circumstances occur, ensuring that permission is obtained by submitting a written request to *TasNetworks* for a variation.
- On large projects, liaising with *TasNetworks* to ensure adequate supply is available when required.
- Ensuring that *TasNetworks* is advised when there is a significant increase in the electrical load at an installation.
- Advising the c*ustomer* when increases in load require changes to the electrical installation including meter changes.

2.7 Connection and metering asset ownership

a) Generally, *TasNetworks* asset ownership and responsibility ends at the *point of supply* (POS). Usually, this will be:

i) for overhead connections, either:

a. the load-side terminals of the service protection equipment connected to a single span of *service wire* from the *distribution network* (including any *TasNetworks service poles*) to either a building or structure on private property; or

b. the physical point of connection of a *service wire* to the first pole on private property, supplying one or more customers.

ii) for underground connections, the load side terminals of the service protection equipment on the *distribution network* which is connected to a customer's underground mains.

Note: generally, electricity poles and associated equipment will be private if they are low voltage* and:

- used to provide a *customer* (or, in some cases, a small group of *customers*) with a connection to the *distribution network*;
- in the case of poles, on private property; and
- in the case of conductor, on the load-side of the first *private pole*.

*Some HV poles, lines and associated equipment installed on private land in or before the early 1980s (as modified and replaced from time to time) will be privately-owned. *Customers* should contact *TasNetworks* if they have any questions about the ownership of electricity assets on their land.

b) Except as provided in Section 3.7(c) or as otherwise agreed with the installation owner, existing metering assets as at 30 November 2017, and meters labelled with "HEC", "Hydro", "Aurora" or "TasNetworks", including assets on the load side of the POS, are the property of *TasNetworks*, including:

- Meter panels and ancillary equipment including modems.

c) From 1 December 2017 where a *Metering Provider* installs new or modifies existing metering, assets *TasNetworks* will initiate a transfer of ancilliary metering assets (including meter panel and isolation devices) to the property owner.

d) The installation owner is responsible for all assets except transformers and associated switchgear, transformer supports (including poles), TasNetworks-owned meters and service fuses on the load side of the POS.

2.8 Installation and maintenance responsibilities

Note: Installation or maintenance responsibilities do not preclude *TasNetworks* from recovering costs from a consumer in accordance with the electricity laws.

A *customer* is responsible for ensuring any assets and equipment owned or used by that customer is regularly inspected, maintained, and continues to be safe and conform with these rules and any applicable laws, regulations and standards.

Generally, ownership and responsibilities for installation and maintenance will be as set out in table 1 below.

Table 1 Connection asset responsibilities

Asset	Install	Own	Maintain
a) One span of overhead service wire from *TasNetworks* distribution assets to the customer's point of supply.	*TasNetworks*	*TasNetworks*	*TasNetworks*
b) One span of overhead service wire from a *TasNetworks*-owned substation, installed in a *TasNetworks*-owned HV power line on private property.	*Customer*	*TasNetworks*	*TasNetworks*
c) Customer-owned HV powerlines and poles on private property, typically from and including the first pole situated on private property.	*Customer*	*Customer*	*Customer*
d) Conduit installed for new underground subdivisions from a *TasNetworks* turret, pit or cabinet to the property boundary.	*TasNetworks* on behalf of the *Customer*	*Customer*	*Customer*
e) Service wire on supply side of *POS*	*TasNetworks*	*TasNetworks*	*TasNetworks*
f) Underground consumer mains	*Customer*	*Customer*	*Customer*
g) Transformer and associated support pole and hardware installed on private or public property, on the supply side of the metering point.	*TasNetworks*	*TasNetworks*	*TasNetworks*
h) *Service poles* on public property. See Section (7.7) or requirement to install a *TasNetworks service pole*.	*TasNetworks*	*TasNetworks*	*TasNetworks*

Asset	Install	Own	Maintain
i) New metering installation and equipment on the meter panel. • New meter panels are purchased and installed by the *consumer / electrical contractor*. • Where an existing meter position is moved, the *consumer* is responsible for purchasing and installing a new meter panel.	*Customer*	*Customer*	*Customer*
j) *TasNetworks*-owned meter and associated equipment (including meter panels)	–	*TasNetworks*	*TasNetworks*
k) Service fuses and service fuse fittings.	*TasNetworks*	*TasNetworks*	*TasNetworks*
l) *Consumer* mains after the point of supply.	*Customer*	*Customer*	*Customer*
m) Mains connector box.	*Customer*	*Customer*	*Customer*
n) Switchboard and switchboard enclosure.	*Customer*	*Customer*	*Customer*
o) Raiser bracket.	*Customer*	*Customer*	*Customer*
p) Vegetation around *TasNetworks*' assets over public property.		-	*TasNetworks*
q) Vegetation around electricity assets over private property.	–	-	*Customer*
r) Unmetered supply cable	*Customer*	*Customer*	*Customer*
s) Unmetered public lighting	*TasNetworks*	*TasNetworks*	*TasNetworks*
t) Metered public lighting	*Customer*	*Customer*	*Customer*
u) Unmetered private contract lighting	*TasNetworks or Customer*	*Customer*	*TasNetworks or Customer*

3. ELECTRICITY SUPPLY

3.1 Supply availability and quality

a) The electricity supplied to a *customer*'s premises is subject to interruptions in availability and fluctuations and other disturbances that affect supply quality.

b) *Customers* should be aware that some electrical equipment might have inadequate tolerance to variations in the electricity supply. *Customers* should ensure that specific equipment has sufficient immunity to extreme voltage fluctuations such as those caused by storms and lighting. The purchase of special protective equipment might be necessary.

3.2 Supply voltages

3.2.1.1 Supply at 230/400 volt (low voltage)

a) The Tasmanian Electricity Code requires *TasNetworks* to provide supply at a voltage of 230 volts (phase to neutral) at a steady state average over a 5-minute period of within plus 10% (253 volts) and minus 6% (216 volts) at a frequency of 50 hertz.

b) The electricity supply is alternating current of approximately sinusoidal waveform. It alternates at a frequency of 50 hertz with a nominal voltage of 230/400 volts from a three-phase, four-wire distribution system. The nominal 50 hertz waveform is sinusoidal but can be modulated by other frequencies for electricity distribution control and communication purposes.

c) In outlying areas, the supply can be from a split single-phase 230/460 volt three-wire distribution system. The single-phase voltage range is the same as from a 230/400-volt 4-wire system. Splitting a phase provides two single-phase supplies with a vector of 180 degrees instead of the normal 120 degrees.

3.2.1.2 Supply at high voltage

Electricity supply can be provided at higher voltages if required. Contact *TasNetworks* for advice on supply arrangements.

3.3 Power factor

The power factor for the *Customer*'s electrical installation must not be less than the relevant value shown in the Table 2. If the electrical installation power factor does not comply with Table 2, the *customer* must install power factor correction equipment at the *customer*'s cost.

Table 2 Power factor requirements

Supply Voltage	Power factor range for customer maximum demand and voltage					
	Up to 100 kVA		Over 100 kVA up to 2 MVA		Over 2 MVA	
	Min lagging	Min leading	Min lagging	Min leading	Min lagging	Min leading
Less than 6.6 kV	0.75	0.8	0.8	0.8	0.85	0.85
6.6 kV to 22 kV	0.8	0.8	0.85	0.85	0.9	0.9
33 kV	0.85	0.85	0.9	0.9	0.95	0.98

Source Tasmanian Electricity Code (TEC).

3.4 Rating of consumer mains

The *TasNetworks connection agreement* and the NER require that a *customer*'s installation, including the *consumer mains*, is adequately designed and effectively coordinates with *TasNetworks* supply.

3.4.1 Conductor size

The *consumer mains* conductor size should be selected so that it does not exceed its design limits for the load and that the protection coordinates with the *TasNetworks* distribution service protection device.

3.4.2 Prospective fault current

Prospective fault currents vary depending on the location of a *customer*'s point of supply in the distribution system and the type of assets supplying the *Customer*---that is, size of transformer, size and length of service wire, and type of service protection.

Where a c*ustomer*'s installation is supplied from the *distribution network* along a public road or in a rural environment, the prospective fault current at the connection point is deemed to be:

Table 3 Prospective fault current at connection point

Service	Prospective fault current
Up to 100 A single-phase or three-phase service (unless otherwise informed by *TasNetworks*)	6 kA
Greater than 100 A single-phase or three-phase service:	Refer to *TasNetworks*

3.4.3 Types of service protection devices

Protection devices provided by *TasNetworks* are usually of the type listed in Table 4. If *TasNetworks* needs to vary the service protection device or rating from those listed in Table 4, the c*ustomer* may be required to contribute to the cost of alternative protection devices.

Table 4 Service fuse rating

Service capacity required	Protection device type
up to 100 A per phase	100 A HRC fuse
Above 100 A per phase	Refer to *TasNetworks*

Note: the purpose of the service protective device is to provide short circuit fault protection on the network and to prevent detrimental effects on the distribution system.

3.5 Electrical interference

Motor starting, variable speed motors, electric furnaces, welding machines, and other electrical equipment can cause voltage fluctuations or harmonic disturbance to installations in the general vicinity.

3.5.1 Interference to electrical supply

a) A *customer*'s electrical installation must not cause interference to the electrical supply of other *Customer*s and must comply with the Tasmanian Electricity Code, specifically:

   i. AS/NZS 61000.3.7 (part 3.7 Limits – Assessment of emission fluctuating loads in MV and HV power systems).

   ii. AS/NZS 61000.3.5: (part 3.5: Limits – Limitation of voltage fluctuations and flicker in *Customer*'s mains power supply systems for equipment rated greater than 16 A).

   iii. The *customer*'s equipment must not introduce harmonic levels in the *TasNetworks* supply voltage in excess of those specified in AS/NZS 61000.3.6 (part 3.6 Limits – Assessment of emission limits for distorting loads in MV and HV power systems).

b) The *customer* must arrange to modify or remove the equipment to eliminate the disturbance. *TasNetworks* will disconnect the electricity supply in the event of the *Customer* failing to do so.

c) *TasNetworks* connecting an installation or accepting equipment for connection to the electricity supply does not exempt the *customer* from these requirements.

3.5.2 Voltage fluctuation due to *Customer*'s load

The measurement of voltage fluctuation is described in the AS/NZS 61000.3 and usually requires the use of a specially designed analyzer. Quantities measured include:

P_{st} – Short-term flicker (generally less than 1.0)

P_{lt} – Long-term flicker (generally less than 1.0)

D_c – Relative voltage change (generally 3% maximum)

D_{max} – Maximum voltage change (generally 4% maximum)

TasNetworks can provide estimates of D_{max} and D_c likely to be experienced at the connection point. In most cases this can be done by desktop analysis using details of the *Customer*'s load and the *TasNetworks* system at the connection point. However, P_{st} and P_{lt} can only be practically determined by measurement after the load is connected on-site.

Low voltage equipment rated less than or equal to 16 A

Equipment that has a manufacturer's compliance certification to AS/NZS 61000.3 provides the best guidance for acceptable connection. Note that equipment with or without manufacturer's compliance certification is still required to meet the requirements in Section 3.5.1 when the equipment is connected at the location where it is to be used.

4. ELECTRICAL INSTALLATION REQUIREMENTS

4.1 Installation requirements

*Electrical Contractor*s are to ensure that the following *Electrical Installation* requirements are met:

1. Each installation must have a Main Switch that can be sealed and locked off and has a removalable cover to enable testing by TasNetworks
2. Connect the consumers mains to the Main Switch
   a. The Main Switch can be on the meter panel at the customers installation for single sites
   b. for multi-tenancy or stratum titled sites the Main Switch will be at the main switchboard for the connection point
3. If the mains are not colour-coded, use heat shrink sleeving to identify the consumers mains active as red, white or blue and the neutral as black.
4. Connect the consumers mains active conductor to the Main Switch
5. Connect the Consumer Mains neutral conductor straight to the main switchboard neutral link. The metering neutral must either:
   a. soldered to the main neutral (preferred option) or
   b. crimped-in with the main neutral lug or (if this is done it will not be behind a sealed panel as required below)
   c. crimped via a sealable stud/bolt.

   Note: The take-off connection point for the metering neutral is not to be taken from the switchboard neutral link/bar, but instead is taken from the main neutral behind the meter panel or main switch board panel and is sealed and out of sight to avoid any chance of illegal interference occurring.
6. The main earth conductor connection (including MEN connection) at the main switchboard shall not be located behind any panel or door etc. where access requires the removal of *TasNetworks* security seals.

4.2 Earthing

a) All installations required to be earthed must conform to the requirements for the multiple earthed neutral (MEN) system of earthing as detailed in AS/NZS 3000.

b) A *Customer*'s low voltage earthing system must be kept 6 metres away from a *TasNetworks* pole-mounted substation pole or ground-mounted substation enclosure.

Note: Conductive mediums, e.g. metallic pipes, concrete reinforcing mesh or metal fencing, can extend an earthing system's reach and are to be included in clearance distances, if applicable.

4.3 Testing

The *Electrical Contractor* who carried-out the electrical installation work must perform all necessary tests and ensure that the work complies with the requirements of the *Occupational Licensing Act 2005*. Refer to AS/NZS 3000 and AS 3017 for details.

4.4 Embedded generators and batteries

Connecting an embedded generator or solar battery system to the *TasNetworks distribution network*, including to an existing connection, is a connection alteration and requires application to *TasNetworks* for approval. Guidelines for the connection of embedded generators (micro, small and large) are available on the *TasNetworks* website:

https://www.tasnetworks.com.au/our-network/new-connections-and-alterations/embedded-generation-and-information-packs/

4.5 Labelling

4.5.1 Cabinets, turrets and service boxes

a) All consumer mains cables must be tested and positively identified in accordance with AS/NZ 3017.

b) All conductors must be clearly identified and permanently marked.

c) All cables not connected must be terminated in accordance with AS/NZS 3000.

d) All cables must be clearly and permanently marked indicating the correct street address.

e) All fuses must be clearly and permanently marked indicating the correct street address.

4.5.2 Consumer mains cables consumer end

a) The consumer switchboard legend must clearly indicate the *point of supply*.

b) All conductors must be clearly identified and permanently marked.

c) All cables not connected must be terminated in accordance with AS/NZS 3000.

4.5.3 Consumer mains cable *point of supply*

This includes pole connections.

a) All *consumer mains* cables must be positively identified in accordance with AS/NZ 3017.

b) All cables not connected must be terminated in accordance with AS/NZS 3000.

c) All cables must be clearly and permanently marked indicating the correct street address, suitable for the environment and best for the installation life-time.

4.5.4 Consumer mains MEN earth stake

For testing purposes, *TasNetworks* needs to connect to the *consumer* MEN earth point. The location of the earthing stake must be documented in the *consumer* switchboard.

5. CONNECTION ARRANGEMENTS

5.1 Compliance

An *electrical installation* will not be connected or remain connected to the *distribution network* if it is found not to comply with:

a) this Service and Installation Rules, or

b) *TasNetworks* notices to Electrical Workers, or

c) AS/NZS 3000, or

d) applicable laws, rules and regulations, including the current *Electricity Industry Safety and Administration Act*.

5.2 Certificate of Compliance

a) A *Certificate of Electrical Compliance (CEC)* MUST be completed by the installing electrician in accordance with the requirements of the Wiring Rules and *the Occupational Licensing Act 2005.*

b) *TasNetworks* only carries out a minimal inspection of the installation before connection. The connection of the installation does not imply that the installation is compliant.

c) The work, any defects, and the test results must be adequately described on the *CEC* as well as registration and contractor details and signature.

d) The *CEC* number is to be noted on the *EWR* when requesting *TasNetworks* to complete a connection.

5.3 Connection agreement

TasNetworks cannot connect a *customer* to the *distribution network* without the c*ustomer* having a *Retail Supply Contract* with an Electricity *Retailer*. Further agreements with *TasNetworks* may be required depending on the connection requirements.

5.4 Licensed Electrical Worker

The *Occupational Licensing Act 2005* requires that all Electrical Work carried out on installations connected to or intended to be connected to the *distribution network*, subject to certain exemptions provided in the Act, are performed by a Licensed Electrical Worker.

5.5 Unauthorised work

A person, other than a suitably accredited person authorised by *TasNetworks* to carry out such work, must not insert or remove a fuse link of a service protective device, make or break any connection (including seals or locks), dismantle any component part of *TasNetworks* equipment or detach such equipment from its fixing point.

5.6 Access to supply address

Under the energy laws (including the Deemed Supply Contract), *Customer*s must allow *TasNetworks*' authorised representatives and their equipment safe and unhindered access to the *customer*'s supply address to:

- read meters;
- connect or disconnect supply;
- inspect or test an *Electrical Installation* at the *premises*;
- inspect, make safe, operate, change, maintain, remove, repair or replace any of *TasNetworks*' infrastructure or works at the premises; and
- clear vegetation from the distribution system.

5.7 Prohibited connections

5.7.1 Fraud

Obtaining electricity by fraud is theft. If a person is found guilty of an offence, it may result in the imposition of substantial fines together with an order for damages to compensate affected parties for any loss and court costs, and it may result in that person to have a criminal record.

5.7.2 Connecting to a neighbour's consumer mains

Connecting a *customer*'s consumer mains to a neighbour's consumer mains other than for multi-tenant installations in the same switchboard is prohibited under the ESI Act.

5.7.3 Connecting to a neighbour's point of supply

Connecting supply to a neighbour's *point of supply* is prohibited under the ESI Act. This includes taking supply from a *private pole* on a neighbour's property.

5.7.4 Connecting across a property boundary

TasNetworks will not install a *TasNetworks*-owned overhead or underground electricity *service wire* or *service cable* from a *private pole* across a property boundary to supply a neighbouring *customer* except as defined in Section 5.16.1 d).

5.7.5 Examples of prohibited connections

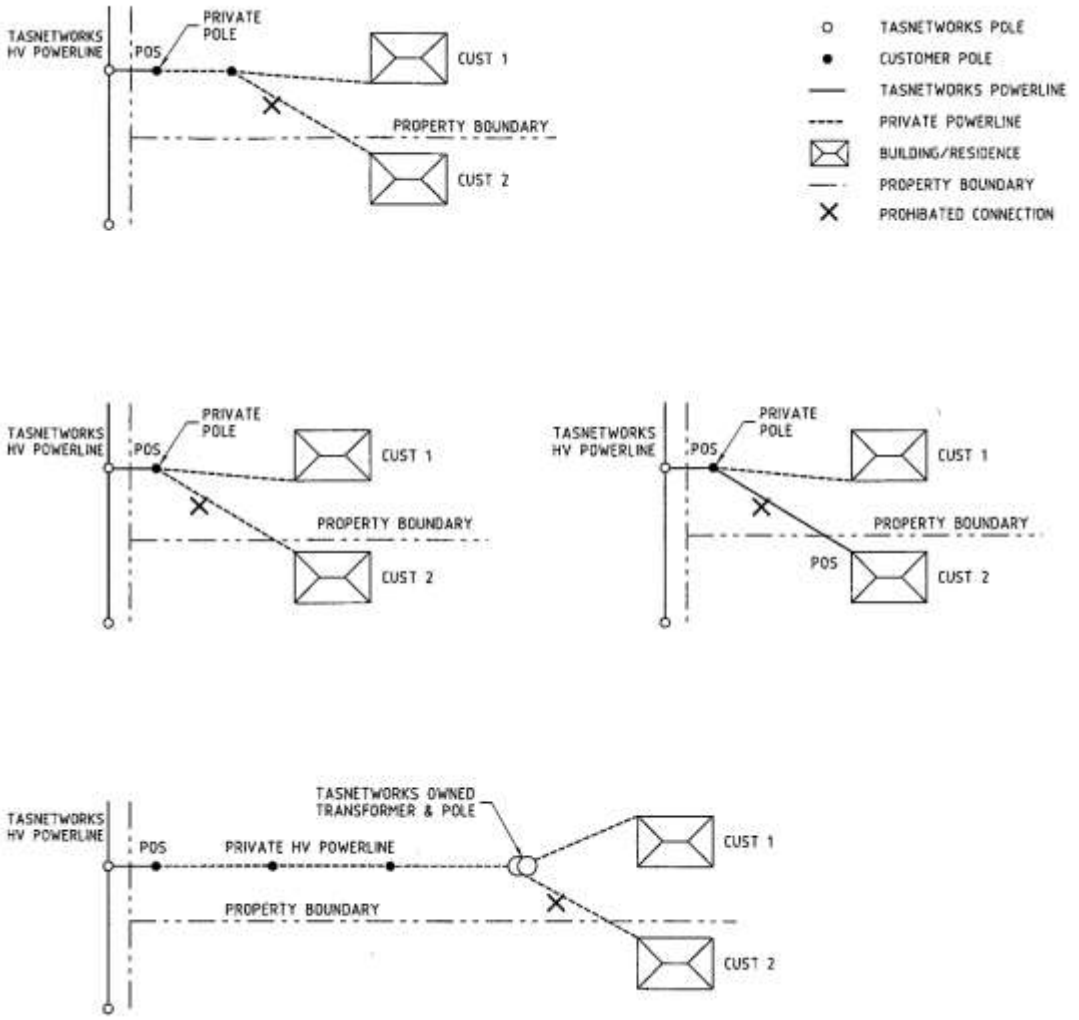

Figure 1 Prohibited connections

5.8 Safety

a) The *Occupational Licensing Act 2005* provides a framework to ensure that *Electrical Contractor*s and Electrical Workers are appropriately qualified and regulated to establish safety standards for electrical articles and to provide for the investigation of accidents in the electricity industry and for related purposes.

b) *Electrical Contractor*s and any other person excavating or operating equipment in the vicinity of *TasNetworks* assets must be aware of all safety requirements, including but not limited to:

- Machinery impacting on or moving poles.
- Undermining pole foundations.
- Below ground assets including electrical cables and earthing systems, gas mains, telecommunication cables.
- Live overhead conductors.

c) The *customer*'s *Electrical Contractor* or any other unauthorised person must not access a *TasNetworks* pole at heights greater than 3 metres above ground level. This includes positioning of ladders and any tools or equipment.

d) No work is permitted on a *TasNetworks* SWER (single earth wire return) installation. Such work has special hazards.

5.9 Point of supply requirements

5.9.1 Underground service cable to cabinet, service box or turret

Where the *TasNetworks* underground service cable terminates at a cabinet, service box or turret, the following requirements apply:

a) The *consumer* mains must be attached to the *TasNetworks* connection asset in accordance with Section 8.1.

5.9.2 Overhead service wire to a private service pole

5.9.2.1 Less than 100 amps per phase

Where the *TasNetworks* overhead service wire terminates at the top of the *private pole*, the following requirements apply:

a) The *private service pole* must be positioned in accordance with Sections 5.13.

b) *Private service poles* must comply with the strength, labelling, erection, footing, and attachment height requirements in Section 7.2.

c) The *service wire* must comply with the clearance requirements in Section 7.1.

d) The *service wire* must comply with the maximum conductor span lengths in Section 7.3.

e) The service attachment must comply with the requirements in Section 7.4.

5.9.2.2 100 amps or more per phase

Overhead supply of 100 amps or more per phase may need to be terminated in a *TasNetworks* turret, pit or cabinet. Contact *TasNetworks* Network Customer Supply (see Section 1.5.2) for further information.

5.9.3 Overhead service wire to a building

5.9.3.1 Less than 100 amps per phase

Overhead supply of less than 100 amps per phase to a permanent point of attachment on a building must comply with the following requirements:

a) *Point of attachment* must be positioned in accordance with Section 5.9.

b) The *service wire* must comply with the clearance requirements in Section 7.1.

c) The *service wire* must comply with the maximum conductor span lengths in Section 7.3.

d) The service attachment must comply with the requirements in Section 7.4.

5.9.3.2 100 amps or more per phase

Overhead supply of 100 amps or more per phase to a permanent point of attachment on a building is a negotiated connection. On receiving of the applicant's *Electrical Work Request* (*EWR*), *TasNetworks* will arrange a *point of attachment* together with the necessary technical requirements to supply the required load.

5.9.4 *TasNetworks* substation within the property

Low-voltage connections to a *TasNetworks* substation located within the *customer*'s own property must comply with the following requirements:

a) *Consumer* underground mains

- The *consumer* mains must be attached to the *TasNetworks* connection asset in accordance with Section 8.1.

b) Overhead *service wire* to a building less than 100 Amps

- As per Section 5.9.3.1

c) Overhead Service Wire to a building 100 Amps or more

- As per Section 5.9.3.2

5.10 Private high-voltage line

High-voltage supply is beyond the scope of this standard. For information, contact *TasNetworks* New Supply.

5.11 Multiple points of supply

5.11.1 Requests for additional points of supply

a) Under normal conditions, *TasNetworks* will provide <u>one point of supply</u> to a *customer*'s property to ensure ease of identification of isolation points in emergencies. A development on one or more adjacent titles or a multi-tenant development including stratum titles, whether staged development or not, will be provided with a single *POS*.

b) *TasNetworks* will consider a written request for additional points of supply to a property in cases where provision of an additional *POS* is considered to be sound engineering practice. For example, where the magnitude of the *customer*'s load is high or the distance separating the relevant electrical installations is more than 200 metres from an existing *POS*.

c) Applications for an additional *POS* must be approved by *TasNetworks* and are negotiated connections as described in Section 3. The *customer* is required to pay the cost of providing an additional supply, including the cost of transformers and any system augmentation or extension works.

d) Multiple points of supply have additional compliance requirements under the AS/NZS 3000 Wiring Rules.

5.11.2 Properties with more than one point of supply

a) Owners of properties with existing multiple points of supply are required to rationalise the points of supply to a single *POS* when a major upgrade or addition to the c*ustomer*'s installation is undertaken.

b) When a minor upgrade or addition to the installation is undertaken, upgrading to a single *POS* may not be required if the isolation point is clear and cannot be misinterpreted by emergency crews and access to metering points is unhindered.

c) Rules 5.11.2(a) & (b) also apply where properties with single points of supply are combined into one property or development.

5.12 Stratum titled developments

TasNetworks treats all stratum-title developments as <u>one *electrical installation*</u>

5.12.1 Three or less installations

a) *TasNetworks* will provide one service to a stratum titled development with three or less installations.

b) The *TasNetworks POS* must be on common land via either an overhead service wire or underground service cable, subject to site restrictions.

c) If using a main switchboard for the development it must be installed on common land. This switchboard will contain the Main Switch. If connecting three or less installations the main switch can be on individual installation if a single main switchboard is not used.

TasNetworks will not install more than three service fuses for an overhead supply. If more than three fuses are required, then supply must be via an underground service cable.

5.12.2 Four or more installations

a) *TasNetworks* will provide one underground service to a stratum titled development with four or more installations.

b) The *TasNetworks POS* will be a turret, pit or cabinet, preferably located at the boundary with the adjacent block, subject to site restrictions.

c) The Main Switch will be located at the main switchboard for stratum-title and multi-tenancy installations

5.13 Position of *Customer*'s connection assets

a) The position of a *customer*'s overhead or underground connection assets must be acceptable to *TasNetworks* and should be selected on a "least cost technical basis".

b) If the position of a *customer*'s overhead or underground connection assets adds unnecessary costs to the *TasNetworks* distribution system, the *customer* will be required to pay for any additional *TasNetworks* assets and installation costs.

c) When connecting to an overhead supply, a *customer*'s overhead connection assets must positioned such that:

   i. The pole, conductor and service attachment requirements in Section 7 are met.

   ii. The *service wire* does not cross any third-party property or a hazardous area as defined in AS/NZS 3000.

   iii. Tree clearing is avoided wherever possible, and

   iv. Impacts on visual amenity are minimised.

   Examples of acceptable service pole locations are shown in Figure 2.

d) Any requirement to install a *TasNetworks service pole* or a private *service pole* or both will be determined in accordance with Sections 5.15 and 5.16.

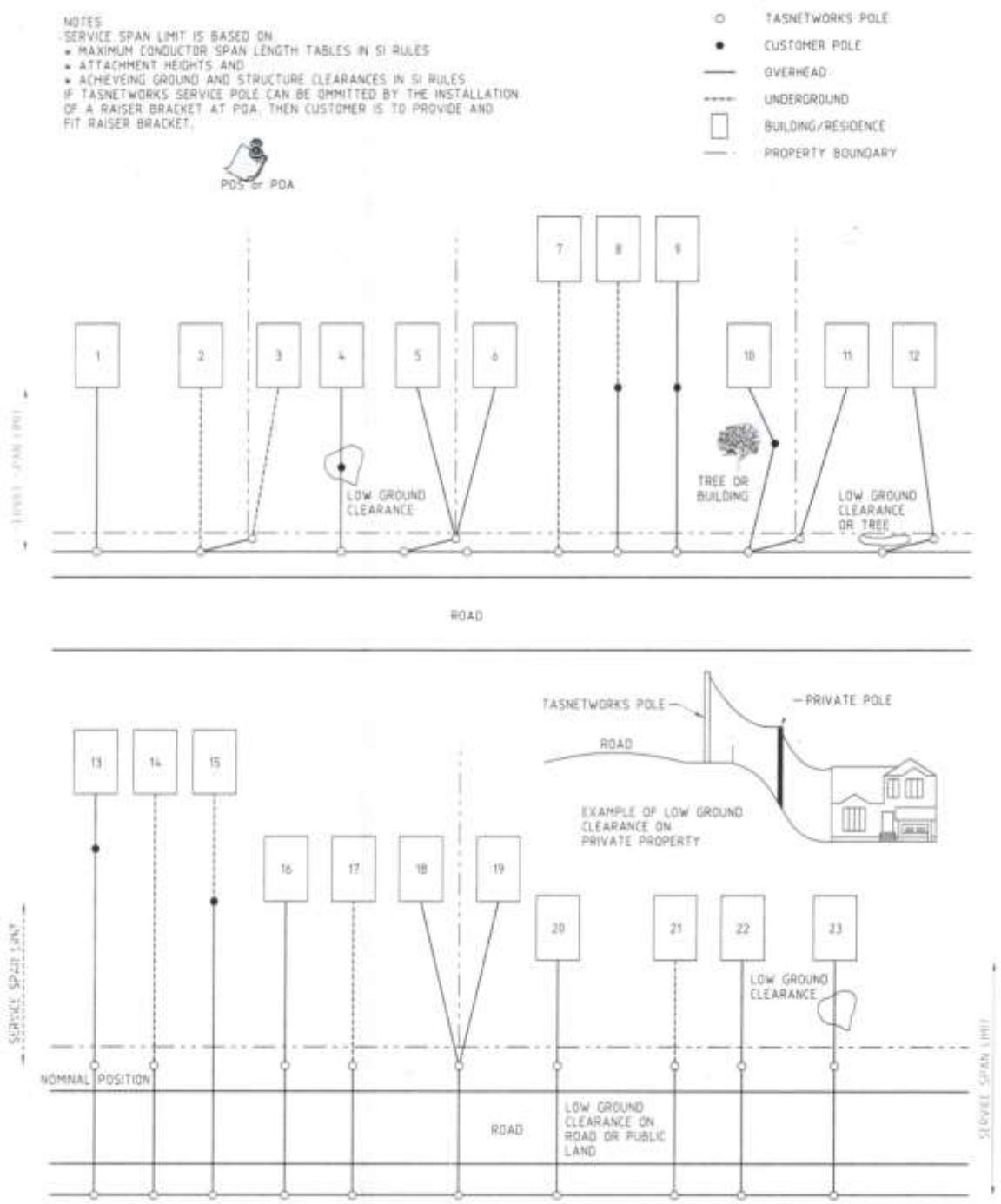

Figure 2 Service pole arrangements

5.14 Requirement to supply via a turret, service box or cabinet

TasNetworks will supply via a turret, service box or cabinet on public land where:

a) The size and number of existing plus proposed *consumer* mains cables installed on a service pole:

   i. makes it difficult to terminate on a *service pole*, or

   ii. restricts work on a *service pole*, or

   iii. restricts working on poles, or

   iv. restricts *TasNetworks* attachments on poles, or

   v. requires multiple *points of supply*.

b) Stratum titled developments of four or more installations (see Section 5.12.2).

c) Required for system development reasons.

5.15 Requirement to install a *TasNetworks* service pole

TasNetworks will install a *TasNetworks service pole* in the road reserve where it is needed to satisfy any one of the following requirements:

a) Maintain the required clearance over the public road or street. This includes clearance over the roadside to the property boundary.

b) Install the services to two or more *customer*s.

c) Avoid a new *service wire* crossing a neighbour's property.

d) Not disadvantage a *customer* whose property to be connected is on the other side of the street to a *TasNetworks* distribution line.

Note: If a raiser bracket at the *point of attachment* can avoid the installation of a *TasNetworks* pole, then the *customer* must provide and install a raiser bracket at the *customer*'s cost.

5.16 Requirement to install private service poles

The *customer* must install a private *service pole* and, if necessary, a raiser bracket on the *customer*'s property to enable the service to be connected to the *customer*'s *point of attachment* where it is needed to satisfy one or more of the following requirements:

a) A single span of overhead service wire would exceed the service span limit from the *TasNetworks* distribution mains. If the distribution mains are on the opposite side of the street, then the maximum length is taken from the nominal position that distribution mains would occupy if constructed on the same side of the street as the premises requiring supply.

b) A *service pole* is necessary to maintain the required clearance over the *customer*'s private property.

c) A *service pole* is necessary to avoid any obstruction, such as a building or tree, on the *customer*'s property.

5.16.1 *TasNetworks* service wire or cable

a) Easements for new *TasNetworks* service wires or cables are not required if the wire or cable is installed on the property of the *customer* taking supply and the supply is for that *customer* only.

b) An easement is required if any *TasNetworks* infrastructure crosses a customer's property to supply another *customer*.

c) *TasNetworks* will install a *TasNetworks service pole* or turret or require a customer's private *service pole* to be positioned at the roadside boundary of the *customer's* and neighbour's property to avoid crossing a neighbour's property.

d) If crossing a neighbour's property is unavoidable, then the *customer* is required to obtain their neighbour's agreement to grant *TasNetworks* an easement on terms acceptable to *TasNetworks* and pay for any easement and registration costs. This might also require the customer to obtain agreement to registration on title of an easement for an existing *TasNetworks* power line. Documentatry proof of an easement MUST be provided at the time of submitting an *EWR*.

e) All easement arrangements must be finalised before the service is connected.

f) TasNetworks will generally hold an easement in relation to existing infrastructure on private land. Electricity easements will not necessarily be registered on title; for example, in some cases an easement will be deemed to exist by virtue of the *Electricity Wayleaves and Easements Act 2000*. Customers with TasNetworks infrastructure on their land should contact TasNetworks if they have any questions about

See also Section 5.7 Prohibited Connections.

5.16.2 Consumer mains

The *customer* is responsible for ensuring it has all the appropriate rights, approval and any necessary agreements in relation to the *customer's* infrastructure prior to connection.

6. CONNECTION PROCESS

For new connections or alteration to refer to *TasNetworks* website.

www.tasnetworks.com.au/our-network/new-connections-and-alterations/

All forms relating to connection or alterations to the *Distribution Network* can be found at:

https://www.tasnetworks.com.au/forms

All required documentation must be correctly completed and submitted.

6.1 Requesting electrical works

Where an *Electrical Contractor* requires a *TasNetworks* presence on site the *Electrical Contractor* must submit an *Electrical Works Request* (*EWR*). Where an *Electrical Contractor* requires *TasNetworks* to be on site on a specific date or time, a *tee-up* must be indicated on the *EWR*.

Because *tee-ups* are resource intensive, it is in the interest of all parties that tee-ups are only requested for specific purposes:

- Alterations to fascia connections
- Replacing consumer mains including changes to *POA*
- Relocating *TasNetworks* meters
- *Customer* mains terminations into turrets or cabinets

A *tee-up* is an arrangement between *TasNetworks* and an *Electrical Contractor* and is found in the fee based services guide, available on *TasNetworks*' website:

www.tasnetworks.com.au/our-network/network-revenue-pricing/distribution-fees-and-tariffs/

6.1.1 Property identification

Work will not be undertaken if the property is not clearly identified including the parcel of land and property, flat or unit number if applicable.

6.2 Connection arrangements

The types of points of supply and consumer mains are shown in Tables 5 (point of supply) and 6 (consumer mains). Examples of the common arrangements are shown in Figures 3, 4 and 5 including locations where TasNetworks requires a Main Switch is to be fitted.

Table 5 Point of supply arrangements

Code	Arrangement	POS
SHV	Private HV line	The *POS* is typically the point of attachment on the supply-side of the first *Customer*-owned pole on the land carrying the HV power line.
SOB	*TasNetworks* overhead service wire to a building	The load-side terminals of the service protection equipment connected to a single span of *service wire* from the distribution network (including any *TasNetworks service poles*) to either a building or structure on private property.
SPP9	*TasNetworks* overhead service wire to a *private service pole*	The physical point of connection of a service wire to the first pole on private property, supplying one or more *Customers*.
SUB	*TasNetworks* substation within the property	The load-side consumer mains terminals of the substation providing the *Customer*'s low-voltage supply.
SUC	Underground consumer mains cable from a *TasNetworks* turret or cabinet	The *POS* is the load-side terminals of the *TasNetworks* service protection equipment (generally within a turret, pit or cabinet).

Table 6 Consumer mains arrangements

Mains	Arrangement
COP	Overhead service wire to a *private service pole*
CSA	Service attachment on private building or structure
CUT	Underground consumer mains to a *TasNetworks service pole*
CUU	Underground consumer mains to a *TasNetworks* underground asset

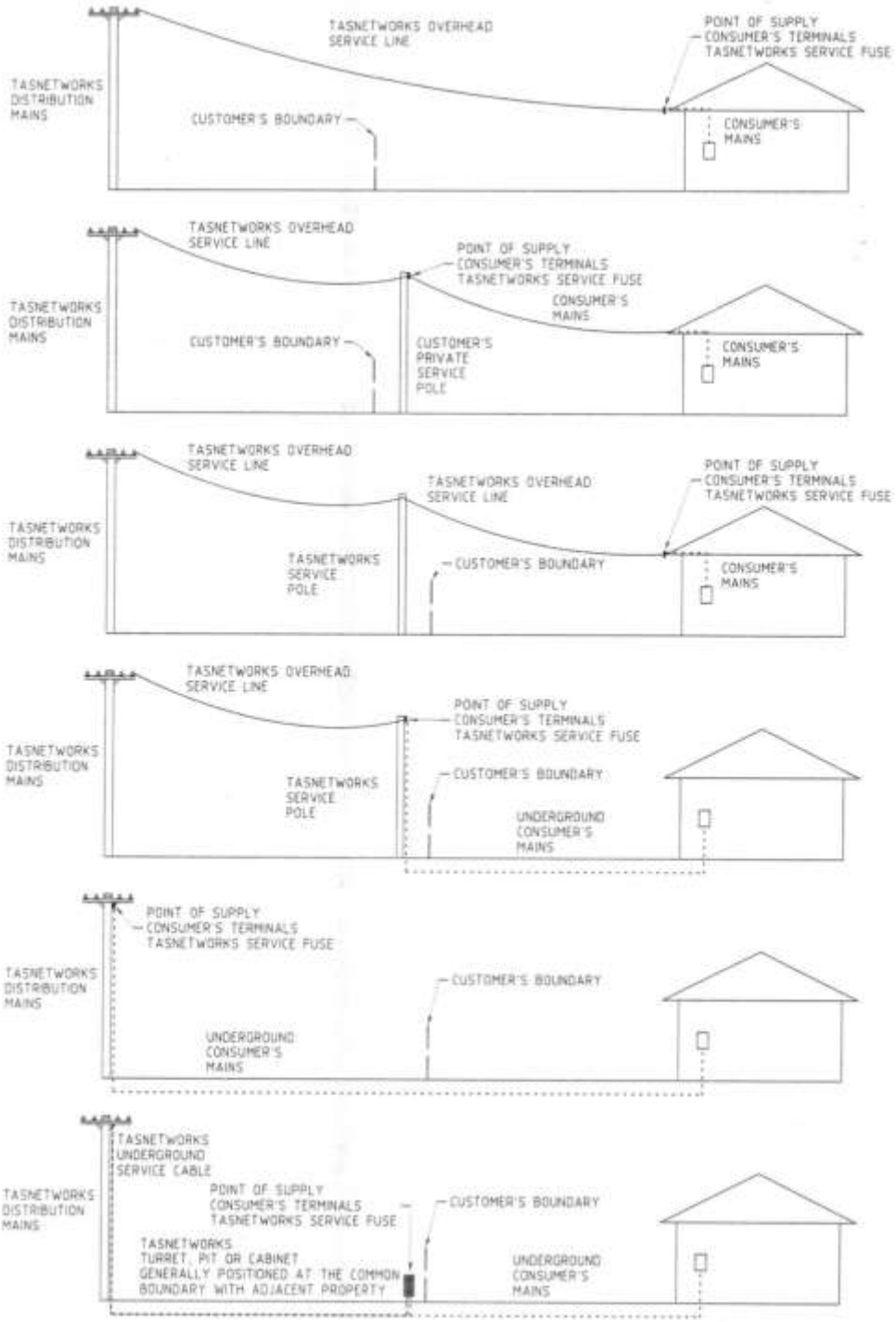

Figure 3 Common single-tenant connection arrangements

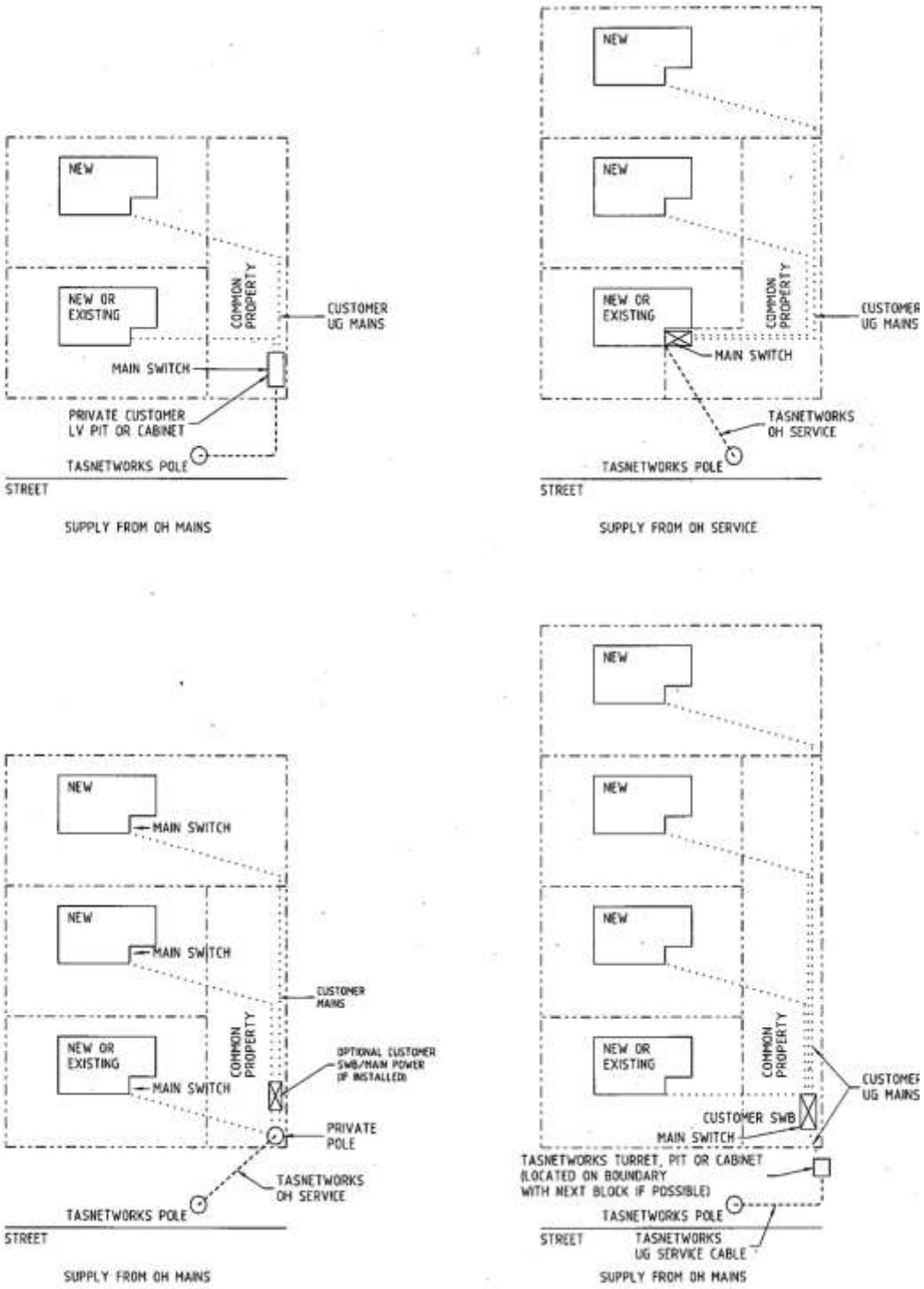

Figure 4 Common stratum-title supply arrangements

A common connection scenario is shown below in Figure 5 demonstrating Main Switch location for multiple-tenancy supply arrangements.

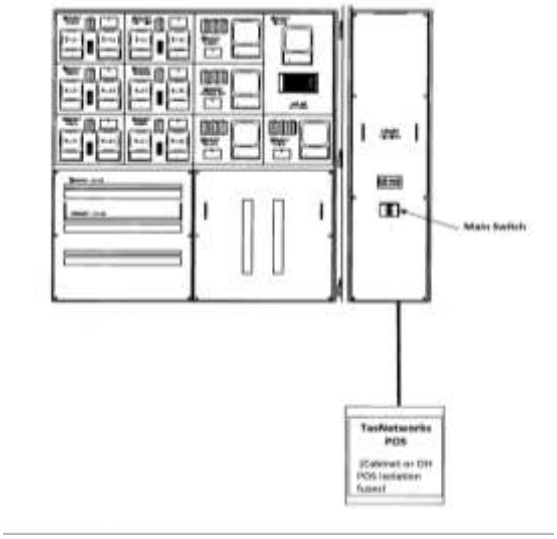

Figure 5 A common multiple tenancy supply arrangement

6.3 Connection application procedure

Based on the connection arrangements selected in Section 6.2, determine if a basic or negotiated connection is required, and then select the appropriate connection application procedure.

Basic or negotiated connection?

A connection is basic unless, because of its complexity or issues, *TasNetworks* and the installation owner must negotiate the terms of the connection. A connection is negotiated if any of the following apply:

- Installation requires system augmentation or network extension.
- Connection requires 100 amps or more per phase.
- Multi-tenant property.
- Stratum-title property
- Unmetered supply installation
- Private or *TasNetworks* HV supply is required.
- Multiple points of supply are sought.

Note: Applications for negotiated connections should be submitted to *TasNetworks* New Supply at an early stage to allow time to coordinate the installation of supply and metering equipment.

6.4 Reconnection request

The application process for reconnecting premises to *TasNetworks* supply depends on the reason the premises were disconnected and for how long.

6.4.1 Disconnected for less than 6 months

All connection requests for premises that have been disconnected from *TasNetworks* supply for less than 6 months must be made to the *Customer*'s electricity retailer. The *Retailer* will arrange for the service reconnection and any meter changes.

6.4.2 Disconnected for 6 months or longer

Premises that have been disconnected from *TasNetworks* supply for a period of 6 months or longer require the *EWR* to state that the installation is safe prior to reconnection.

6.4.3 Disconnected because of defects

Where a defect has been identified in relation to private electricity assets or equipment, a licenced *Electrical Contractor* must certify (on the *EWR*) that the installation is safe prior to reconnection. The application process is the same as Section 6.4.2.

6.4.4 Resubmission of application

In the event that a connection cannot be made due to failure to meet the conditions of connection defined by this standard, the following procedure applies:

Table 7 Connection application resubmission procedure

Step	Detail
1. Notify	The *TasNetworks* Officer contacts the associated contractor and advises faults to be rectified.
2. Resubmit	When the non-compliance has been rectified, the associated contractor submits a new *EWR*.
3. Recommence	*TasNetworks* will guarantee the connection date from when new *EWR* is submitted.

6.5 Connection works processes

Figures 5 and 6 below summarise the responsibilities in making and energising a *Customer* connection to the network.

The second depicts the connection sequence.

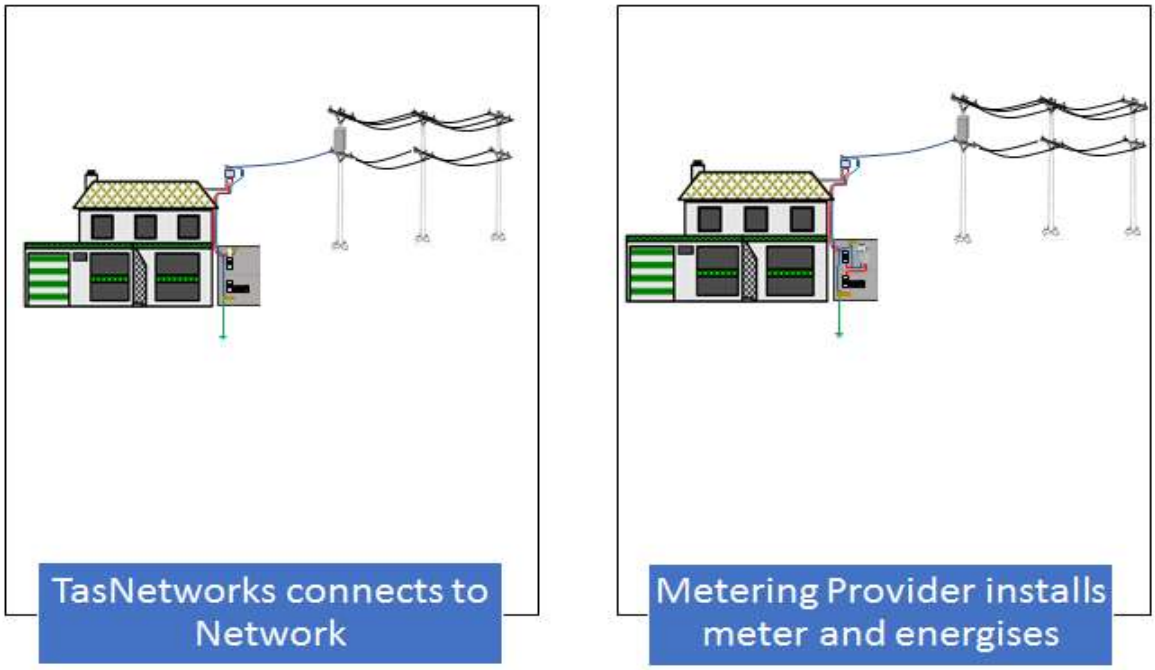

Figure 6 Connection responsibilities

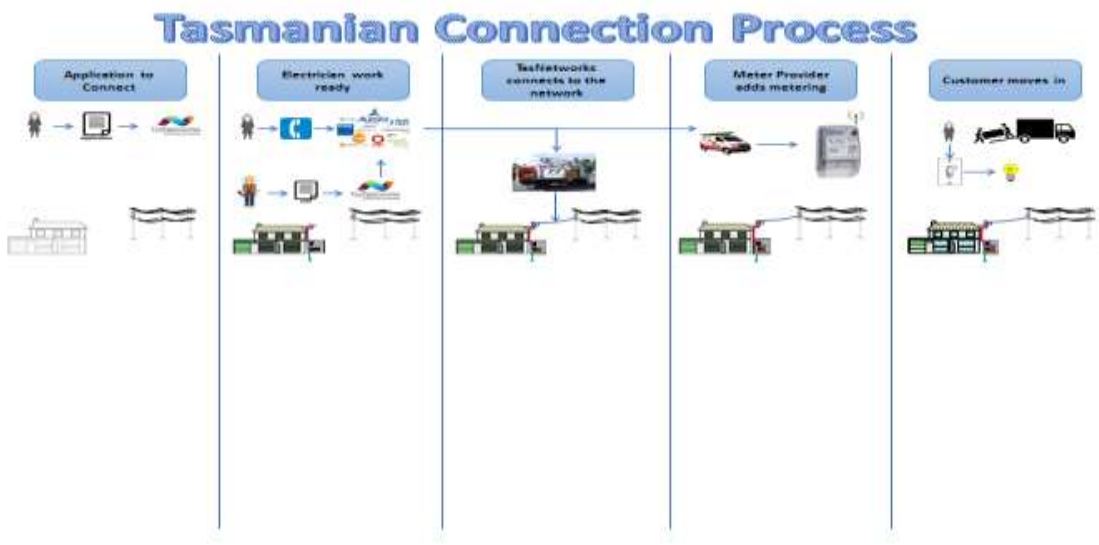

Figure 7 Tasmanian electricity connection flowchart

Section 6.2 for descriptions of overhead supply arrangements.

7. OVERHEAD CONNECTION REQUIREMENTS

7.1 Clearances

TasNetworks overhead *service wires* must comply with the following clearance requirements:

a) Minimum clearance to ground and structures specified in drawings D-OH1-0351-SD-001, D-OH1-0359-SD-001, D-OH1-360-SD-001 and D-OH1-0372-SD-001 in Appendix C.1.

b) Minimum clearance to other lines specified in drawing D-OH1-0375-SD-001 in Appendix C.2.

c) Minimum clearance to vegetation specified in Section 7.6.

7.2 Service poles

Private *service poles* must comply with the following design requirements:

7.2.1 Design criteria

Service poles must be designed in accordance with the following criteria: Refer AS 7000.

a) Proprietary steel *service poles* must be rated at 2 kN or greater.

b) Proprietary service connections or raiser brackets must be rated at 1 kN or greater.

c) Ground clearance must be based on an initial conductor stringing at 5.6% of the conductor's designated breaking load (CBL) at 5 ˚C and a conductor operating temperature of 75 ˚C.

d) Pole-top force must be based on:

   i. 500 Pa wind force at 15 ˚C on conductor.

   ii. 1200 Pa wind force on square pole.

e) The effect of pole wind loading on the resultant conductor loading must be equivalent to the resultant conductor force for an intermediate pole and perpendicular to conductor force on an unstayed termination pole.

f) Clamping force on the conductor's insulation must not exceed 28% of the CBL.

7.2.2 Service pole types and strengths

A private *service pole* must have:

a) The minimum diameter at ground level and at the pole top.

b) The strength rating of the pole in kN at the tip.

c) The wall thickness for steel poles. Steel poles must be galvanised.

d) The required buried depth.

e) The species of timber if a natural wood pole is used.

f) The minimum rim thickness of wood for safety factors of 2.5, 1.5 and 1.0.

g) The treatment at and below ground line to inhibit the promotion of corrosion (soft rot or heart rot, whichever is applicable).

7.2.3 Labelling *service poles*

The *service pole* must be marked permanently at 3,450 mm from the butt with the following information:

- Strength rating at tip in kN
- Required buried depth in mm
- Species of timber, if applicable
- Date of erection

Appendix D includes sample drawings (D-OH1-0356-SD-001 and D-OH1-0357-SD-001) of service poles and foundations for reference only.

7.2.4 Attachment heights

Refer to Appendix E.1 for approximate overhead low-voltage attachment heights on *TasNetworks service poles*. Note that attachment heights vary for different *TasNetworks* assets and locations.

7.3 Conductor maximum span lengths

The conductor spans must comply with the following maximum span requirements:

a) For an unstayed termination pole, refer to Appendix F.1.

b) For an unstayed fascia/raiser bracket, refer to Appendix F.2.

c) For an unstayed intermediate pole, refer to Appendix F.3.

7.4 Service hook or raiser bracket

The service attachment on a building fascia must comply with the following requirements:

a) Hardwood fixing fascia support capable of withstanding a minimum1 kN load.

b) Fascia attachment force must be based on 350 Pa wind force at 15°C on conductor.

c) A 1 kN rated or greater raiser bracket (if required). Sample raiser brackets are shown in Appendix G, drawings D-OH-688-SD-001 and D-OH1-689-001 (note these items were designed to AS 3000 and not to the current AS 7000 standard).

d) The angle between the service cable and the fascia should not be less than 30 degrees for a service connected to the fascia and 60 degrees for a service connected to a raiser bracket. (see Figure 7).

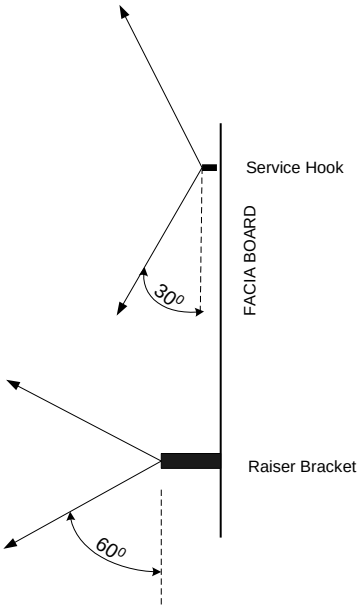

Figure 8 Maximum angle of service attachment

e) The clearances from ground, buildings, structures, vegetation and other lines specified in Section 7.1 are met.

f) The maximum span length specified in Section 7.3 is met.

If a *TasNetworks service pole* can be avoided by the installation of a raiser bracket at the point of attachment, then the customer must supply and fit a raiser bracket.

7.5 Installing consumer underground mains on a *TasNetworks* service pole

Note: *TasNetworks* will not connect non-compliant installations.

Installation of *consumer mains* on a *TasNetworks service pole* must comply with the following requirements:

Note: *Electrical Contractor*s must observe all safety procedures associated with excavating and operating equipment in the vicinity of *TasNetworks* assets, as described in Section 5.8.

a) Customers must obtain approval of their local Council to attach a *consumer mains* to a *TasNetworks* service pole.

b) The fully completed indemnity form “Indemnity for installation of consumer mains on *TasNetworks* poles” (Form P) must be signed by all parties and submitted to *TasNetworks* with the *EWR*.

c) The installation is not prohibited by Section 5.7.

d) The maximum number of conductors must not exceed the limits in Section 7.5.2.

e) The customer’s *consumer mains* installation must comply with D-OH1-0366-SD-001 through D-OH1-367-SD-003 in Appendix H.

f) The *consumer mains* must terminate in the *TasNetworks* service fuse or to a point 3 m above ground level.

7.5.1 Prohibited cable attachments to *TasNetworks* poles

The following connection assets are not permitted on *TasNetworks* poles:

a) *Consumer mains* on:

   i. SWER (single-wire earth-return) transformer poles.

Note: Contact between the low-voltage and high-voltage earthing systems on SWER transformers can be hazardous and may damage the SWER transformer.

   ii. HV switch poles.

   iii. HV link poles.

   iv. HV fuse poles (except non-SWER transformer poles).

   v. Concrete poles or poles comprising of steel and concrete (e.g. Stobie poles and spun concrete poles) carrying HV assets.

   vi. Steel poles carrying HV assets.

b) *Consumer mains* cable inside *TasNetworks* steel poles

c) Metallic objects that connect with the ground, a building or a remote location are not to be installed on steel, concrete or steel-concrete HV poles.

d) Metal conduit connections from the pole to the *customer* installation.

e) Metal cable trays.

f) Customer's metered wiring.

7.5.2 Maximum number of conductors on *TasNetworks* poles

The maximum number of existing plus proposed conductors on a *TasNetworks service pole* must not exceed any of the following limits

a) *TasNetworks* pole on public land:

   i. One set of 150 mm^2 or 240 mm^2, 1 phase or 3 phase or

   ii. Two sets of up to and including 120 mm^2, 1 phase or 3 phase

   iii. One cable per phase

b) *TasNetworks* pole on private land:

   i. One set of up to and including 240 mm^2 in parallel, 1 phase or 3 phase

Note: Cables equal to or smaller than 50 mm^2 (except xlpe) must be enclosed in flexible hose-type conduit.

7.6 Vegetation management

Adequate clearance between vegetation and overhead *service wires* is essential to minimise the risk of fire and to maintain a safe and continuous supply of electricity for customers.

Each *customer* must, at its own expense, maintain safe clearances between vegetation on the customer's property and electrical infrastructure providing supply to the *customer's electrical installation*.

7.6.1 Vegetation clearance

a) All overhead *service wires* must be positioned so that they are clear of any vegetation.

b) A minimum clearance of 2.5 metres must be maintained on all overhead *service wires*. When maintaining vegetation, trees or limbs that are potentially unsound must be removed and allowance must be made for regrowth, as shown in Figure 8. For more information, refer to the *TasNetworks* brochure "Safe Growing Near Powerlines".

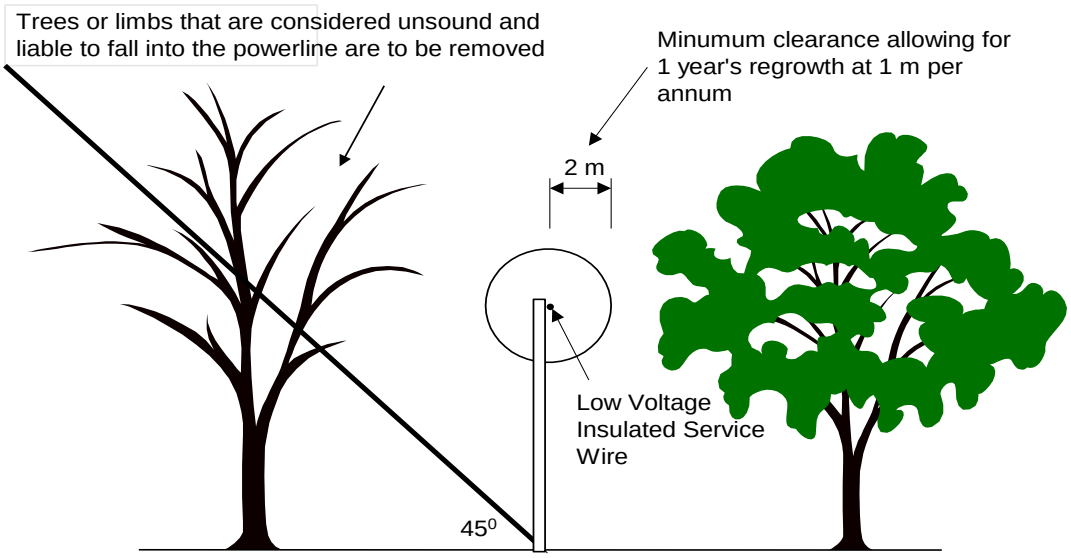

Figure 9 Vegetation clearance

7.6.2 New overhead service wire

Where a new overhead service wire is to be erected by *TasNetworks* to connect a *customer* to the distribution system, the *customer* requesting the connection must arrange and pay for the clearing of vegetation from the proposed route. This includes the portion of the service wire on council land in the road reserve and the portion on the *customer's* property.

7.6.3 Existing overhead service wire

The *customer* is responsible for maintaining trees on their property so that they remain clear of all *service wires*. Except as provided in Section 7.6.2 for new *service wires*, *TasNetworks* is responsible for vegetation maintenance of the portion of the *service wire* on council land in the road reserve.

7.6.4 Vegetation clearing work by accredited contractors

Persons who perform work near live overhead lines must be accredited and authorised by *TasNetworks*.

8. UNDERGROUND SUPPLY REQUIREMENTS

See Section 6.2 for descriptions of underground supply arrangements.

8.1 Installing consumer mains in a *TasNetworks* underground asset

The customer's underground consumer mains installation must comply with D-OH1-0366-SD-001 through D-OH1-0368-003 in Appendix H.

8.2 Consumer mains conduit

In new underground subdivisions, a 50 mm^2 conduit is normally installed from the turret, service box or cabinet to a point 1.5 metres inside the customer's property boundary. This conduit is owned by the property owner, and is procured and installed by TasNetworks on their behalf.

If no conduit has been installed from the *TasNetworks* underground asset to the property, the *Electrical Contractor* is responsible for installing any conduits from *TasNetworks* turret, service box or cabinet. Before installing the conduit, the *Electrical Contractor* should ensure that the turret, service box or cabinet has the capacity for additional conduit before commencing work.

8.3 Security

Access to *TasNetworks* distribution assets is restricted to authorised *TasNetworks* personnel or persons authorised by *TasNetworks*.

- Cabinets are secured by a keyed lock.
- Service boxes are usually wall-mounted, installed on the *consumer's* building, and secured either by sealing, bolt or keyed lock.
- Turrets are secured by a lock with a dedicated access tool.

8.4 Installing to a temporary meter/switchboard position

It is common practice for installations intended to be supplied via an underground consumer mains to have the *consumers* mains installed and run to a temporary position close to the final meter/switchboard position. The temporary position provides electricity supply to the construction site construction. The meter/switchboard is fitted to the building when the building is constructed.

The meter/switchboard must be positioned on a stable and secure structure as shown in Figure 9.

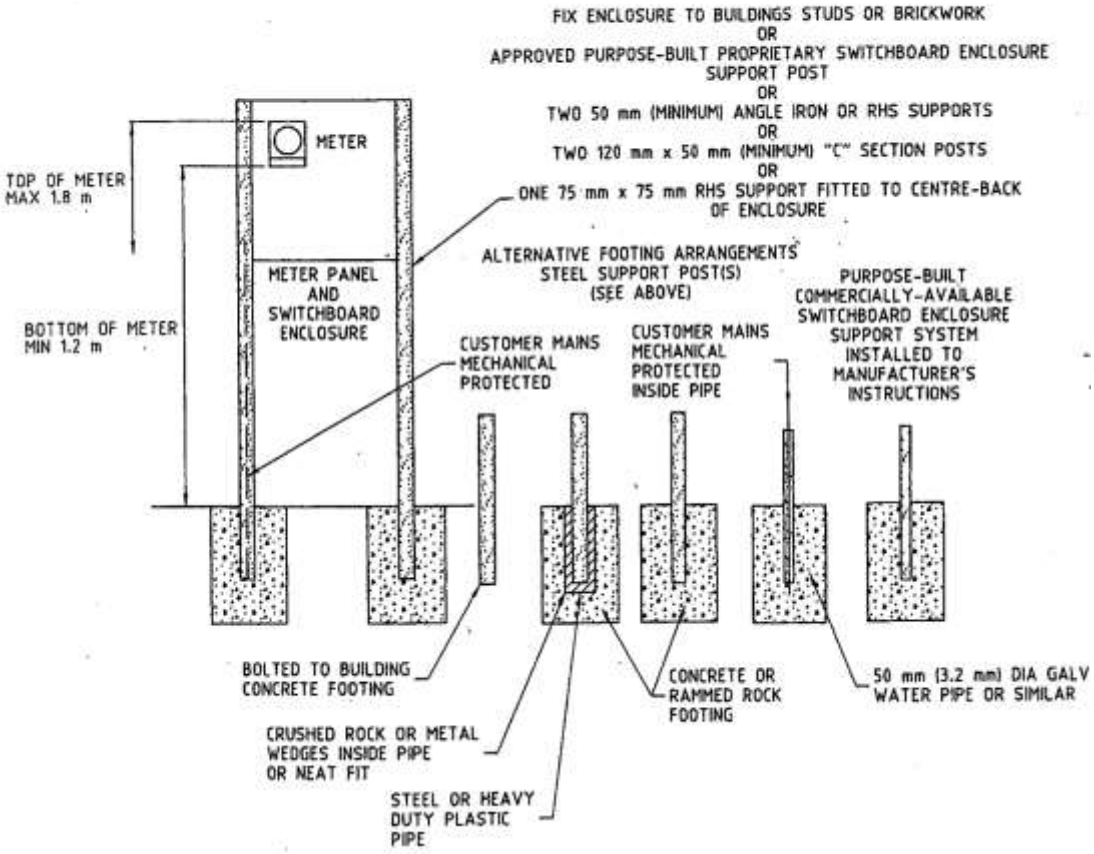

NOTES:

- TEMPORARY OR PERMANENT INSTALLATION MUST HAVE MECHANICAL PROTECTION AND COMPLY WITH AS/NZS 3000 WIRING RULES
- ENCLOSURE MUST BE HELD SECURELY WITH NO TWISTING
- ADDITIONAL CHARGES APPLY FOR A REVISIT WHEN MOVING REQUIRES RECONNECTION
- THE PERMANENT METER PANEL IS TO BE USED
- SEE METERING SECTION FOR OTHER REQUIREMENTS
- NO BRACING PERMITTED. (ONLY UNTIL CONCRETE SETS)
- ACCESS TO TASNETWORKS TURRETS BY TASNETWORKS AUTHORISED PERSONNEL ONLY

Figure 10 Permanent supply in a temporary position

9. METERING INSTALLATION REQUIREMENTS

9.1 General

Customers are responsible for ensuring that metering equipment installed on their property is not damaged or interfered with.

Metering panels and equipment installed from 1 December 2017 will be the property of the *installation owner* and will not be owned or maintained by *TasNetworks*.

Existing metering equipment from 1 December 2017, including panels will remain the property of *TasNetworks* until a third party attaches a new meter and there is a formal transfer of ownership to the property owner.

9.1.1 Separation from distribution infrastructure

Metering equipment must not be mounted on *TasNetworks* infrastructure unless approved by *TasNetworks*. Section 4.2 specifies installation earthing requirements and clearances.

9.1.2 Existing metering installation alterations and additions

AEMO accredited Metering Providers are permitted to install metering equipment as defined in Chapter 7 of the NER and associated metrology procedures and standards on meter panels owned by TasNetworks. Metering Providers are also permitted to make the required alterations to TasNetworks owned meter panels in order to complete their work. Installation of third party equipment on TasNetworks owned meter panel will initiate a transfer of ownership of the meter panel to the property owner. This clause does not include metering transformers, which must be relocated to the customer side of the customer main switch upon replacement or upgrade of the switchboard.

9.1.3 Maintenance

TasNetworks will maintain metering equipment owned by *TasNetworks*.

Maintenance of that equipment is only to be done by *TasNetworks* or an Authorised Electrical Contractor working on behalf of TasNetworks.

9.1.4 Location of customer's equipment

Customer's equipment including load limiting devices cannot be installed on *TasNetworks* owned meter panels. TasNetworks will not maintain or repair meter panels with customers equipment installed on the meter panel.

9.1.5 Unacceptable access conditions for *TasNetworks* owned metering

TasNetworks will not permit *TasNetworks* owned metering equipment to be located where access cannot be guaranteed. If metering equipment is enclosed without authorisation, then the *customer* will remove the enclosure or lock or may be required to have the metering equipment relocated to a more accessible position at the *customer's* cost.

If the customer, without consulting with *TasNetworks*, causes restricted meter access conditions below, the *customer* will be required to resolve the access issue.

1. Metering equipment enclosed by building alterations or additions, (i.e. sunrooms and verandas being enclosed by fly screens and security doors or a garage being added to the side of a house).
2. Brick walls and fences etc. restricting access to the metering equipment.
3. *Customer's* private locks on metering enclosures, gates or doors giving direct access to the metering position. Existing arrangements where *TasNetworks* has previously accepted a key shall remain until the lock is changed. Then, only a *TasNetworks* standard master keyed lock shall be used if security is required.

9.1.6 Current transformer equipment supply

Current transformer equipment (fuses, cable, links etc.) will not be supplied by *TasNetworks* and is the responsibility of the *Meter Provider*.

9.2 High voltage metering

High voltage metering is the responsibility of the *Meter Provider*.

10. UNMETERED SUPPLY

10.1 Unmetered supply excluding public and contract lighting

a) All unmetered supply connections are negotiated connections, requiring load assessment and approval by *TasNetworks*.

b) With the exception of public and private contract lighting, unmetered supply is, in general, only suitable for installations with a constant load of less than 1000 watts, where a "constant load" is a load that, under normal operating conditions, does not vary during any 24-hour period of any day of the year. Loads that regularly switch on and off, such as lighting or BBQ supplies, are not constant loads. Examples of unmetered supply installations include but not limited to electric fence supplies, traffic light supplies, communication equipment supplies, and TV amplifier supplies at unit developments.

c) *Electrical Contractor*s should discuss with their *customer* why an unmetered supply arrangement is being sought and obtain their in-principle approval before applying for the connection. In particular, the *customer* should be aware that no financial advantage is gained from an unmetered supply arrangement. The network tariffs for unmetered and metered loads are the same and the load assessment is designed to minimise the financial risk to the *Retailer* and network service provider if load differs from the assessed average daily load.

d) Installations must be designed and constructed such that equipment other than the assessed load equipment cannot be connected to the installation. Exceptions to this rule will only be approved under strict conditions—for example, a traffic light used only for emergency or maintenance purposes.

e) The unmetered load must be assessed by a *TasNetworks* metering technician at the time of connection of the unmetered supply. The daily load is assessed by measuring the peak load (spike) in watts of the installation and applying the peak load over the 24-hour period. For example, for a base load of 900 watts with a 920 watt peak load, the assessed average daily load used for market data and retail billing is 920 watts x 24 hours = 22.08 kWh.

f) Without approval by *TasNetworks*, the load profile at an unmetered supply installation must not vary by more than 5% (spikes and dips) of the base load.

g) The following information must be permanently kept at the site of the unmetered supply in the form of a schedule or label:

- The load size and description of the unmetered load.
- The date the unmetered supply was installed.
- The name of the electrical technician it was installed by.
- The name of the electrical contracting firm it was installed by.
- Details of the load assessment provided by the metering technician (filled in by the metering technician at the time of assessment).
- The name of the metering technician who assessed the installation (filled in by the metering technician at the time of assessment).
- The date of assessment (filled in by the metering technician at the time of assessment).

h) The *customer* or their *Electrical Contractor* must notify *TasNetworks* before changes are made to the base load of an unmetered supply and request a reassessment of the load by submitting an *EWR*.

Important: It is unlawful to change the base load of an unmetered supply or use an unmetered supply in an unapproved manner without the prior knowledge, assessment or approval of *TasNetworks*.

10.2 Public and private contract lighting

Note: Public and private contract lighting installations are beyond the scope of this standard and only general descriptions are provided in this section. For further information, refer to the *TasNetworks* Public Lighting Standard.

Unmetered public lighting

Unmetered supply is the normal supply arrangement for lighting in most public roads and streets. Public lighting installations must comply with *TasNetworks* public lighting standards and are owned and maintained by *TasNetworks*. Detailed designs must be submitted by the road lighting authority (usually a local council) to *TasNetworks* for approval prior to construction. *TasNetworks* recovers its maintenance costs through the public lighting tariff.

Metered public lighting

Metered public lighting is generally associated with character streetscape lighting that does not conform with the *TasNetworks* public lighting system. A metered public lighting installation is owned and maintained by the lighting authority. It has a defined point of supply, metering point, and fuse point. Metered public lighting connections are negotiated connections and must be approved by *TasNetworks* prior to construction.

Private contract lighting

Private contract lighting is typically installed on *TasNetworks* poles and connected to the *TasNetworks* unmetered public lighting supply where it is impractical for the customer to provide their own lighting—for example, flood lighting for a building from a *TasNetworks* pole. A private contract lighting installation is supplied, installed and maintained by *TasNetworks*.

All components in an unmetered private contract lighting installation (photoelectric cell, lighting fitting, globe, cable and arm) must be normal *TasNetworks* stock items and are supplied and installed by *TasNetworks* at the customer's cost. The lighting fitting, globe, cable and arm are maintained and replaced by *TasNetworks* at the *customer's* cost. The costs of maintaining and replacing the photoelectric cell and globe are recovered by *TasNetworks* from the contract lighting tariff.

Unmetered private contract lighting connections are negotiated connections and must be approved by *TasNetworks* prior to construction. Unmetered private contract lighting will not be approved where a metered installation already exists on the site.

Appendix A Electrical Works Request

The Electrical Works Request (*EWR*) is a document that is used to capture accurate information from *Electrical Contractor*s to allow connection work and metering work to be carried out. An *EWR* should be submitted when you require *TasNetworks* to perform work at an installation, or you need to request a meter or a tariff change from the retailer.

The *EWR* should only be submitted when work is completed or a tee up is required.

The *TasNetworks* electronic Connections Portal on the *TasNetworks* website provides access to submit an *EWR*.

The Connections Portal can be accessed via the following link:

https://connections.tasnetworks.com.au/account/login

Connections Portal *EWR* user guide can be accessed below:

https://www.tasnetworks.com.au/TasNetworks/media/pdf/Connections-Portal-EWR-User-Guide-V1-4.pdf

A.1 Submitting an *EWR*

Electrical Works requests are to be submitted through *TasNetworks* Connection portal by a licensed *Electrical Contractor*.

EWR's should only be submitted when on-site work is required on an installation. Incorrectly filled in *EWR*s or *EWR*s that do not contain enough information will be rejected and may delay your job so please take the time to fill out the *EWR* correctly.

Appendix B Related Australian Standards

Ref.	Title
AS 1026	Impregnated paper insulated cables for electricity supply at working voltages up to and including 33kV
AS 1033	High voltage fuses (for rated voltages exceeding 1000V)
AS 1074	Steel tubes and tubular for ordinary service
AS 1104	Informative symbols for use on electrical and electronic equipment
AS 1243	Voltage transformers for measurement and protection
AS 1329	Methods for the analysis of zinc and zinc alloys
AS 1359	Rotating electrical machines – general requirements
AS 1397	Steel sheet and strip – hot-dipped zinc-coated or aluminium/zinc-coated
AS 1429.1	Electric cables – polymeric insulated
AS 1554	Structural Steel Welding (known as the Structural Steel Welding Code)
AS 1554.1	Welding of steel structures
AS 1650	Hot-dipped galvanized coatings on ferrous articles
AS 1657	Fixed platforms, walkways, stairways and ladders – design, construction and installation
AS 1674	Safety in welding and allied processes
AS 1746	Conductors – bare overhead – hard – drawn copper
AS 1795	Sheets and boards for electrical purposes
AS 1824	Insulation coordination (phase to earth and phase to phase, above 1kV)
AS 1939	Degrees of protection provided by enclosures for equipment (IP Code)
AS 1966	Electric arc welding power sources
AS 1977	Flexible insulating sleeving for electrical purposes
AS 2005	Low voltage fuses – fuses with enclosed fuse-links
AS 2006	High voltage AC switchgear and control gear – circuit breakers for rated voltages above 1000V
AS 2053	Non-metallic conduits and fittings
AS 2067	Switchgear assemblies and ancillary equipment for alternating voltages above 1kV
AS 2086	High voltage AC switchgear and control gear – metal enclosed – rated voltages above 1kV up to and including 72.5kV
AS 2209	Timber poles for overhead lines
AS 2279	Disturbances in mains supply networks
AS 2374	Power transformers
AS 2430	Classification of hazardous areas
AS 2481	All-or-nothing electrical relays (instantaneous and timing relays)

Ref.	Title
AS/NZS 3000	Electrical installations – buildings, structures and premises (known as the wiring rules)
AS/NZS 3001	Electrical installations – movable premises (including caravans) and their site installations
AS/NZS 3010	Electrical installations – supply by generating set
AS/NZS 3012	Electrical installations – construction and demolition sites
AS/NZS 3017	Electrical installations – testing guidelines
AS 3100	Approval and test specification – general requirements for electrical equipment
AS 3116	Approval and test specification – electric cables – elastomer insulated – for working voltages up to and including 0.6/1kV
AS 3147	Approval and test specification – electric cables – thermoplastic insulated – for working voltages up to and including 0.6/1kV
AS 3155	Approval and test specification – neutral screened cables for working voltages of 0.6/1kV
AS 3187	Approval and test specification – mineral insulated metal sheathed cables
AS 3198	Approval and test specification – electric cables – XLPE insulated – for working voltages up to and including 0.6/1kV
AS 3439	Low Voltage Switchgear and control gear assemblies
AS 3560	Electric cables – XLPE insulated – aerial bundled – for working voltages up to and including 0.6/1kV
AS 3600	Concrete structures
AS 3608	Insulators – porcelain and glass, pin and shackle type – voltages not exceeding 1000V AC
AS 3609	Insulators – porcelain stay type – voltages greater than 1000V AC
AS 6002	Domestic electricity metering enclosures
AS 60044.1	Current transformers
AS/NZS 61000.3	Electromagnetic Compatibility (EMC) – limits
AS/NZS 7000	Overhead Line Design – Detailed Procedures

Appendix C Minimum clearances

C.1 Clearance to ground and structures

4. CLEARANCES

MINIMUM CLEARANCES FOR SERVICE SPANS OF 'COVERED' OR 'INSULATED' CONDUCTORS OR AERIAL CONSUMER'S MAINS OF INSULATED CONDUCTOR. NB. (*) INCLUDES AN ALLOWANCE FOR ADDITIONAL SAG.

(I)	WITHIN A PUBLIC ROAD RESERVE (KERB TO KERB OR SHOULDER TO SHOULDER)	5.8M *
(II)	ELSEWHERE IN THE ROAD RESERVE INCLUDING FOOTPATH.	4.7M *
(III)	OVER AREAS WHERE SAILING CRAFT ARE RIGGED OR USED.	5.8M *
(IV)	OVER CUSTOMER'S GROUND WHERE IRRIGATION PIPES OR FARM MACHINERY MAY BE USED.	5.8M *
(V)	OVER GROUND OR ELEVATED AREAS IN CARAVAN PARKS.	5.8M *
(VI)	OVER KERB OR THE EDGE OF CARRIAGEWAY.	5.8M *
(VII)	OVER SERVICE STATION DRIVEWAYS AND FARM DRIVEWAYS.	5.8M *
(VIII)	CUSTOMER?S DRIVEWAYS (BUT NOT FARM DRIVEWAYS).	4.7M *
(IX)	OVER CUSTOMER'S GROUND WHERE VEHICLES, FARM MACHINERY OR IRRIGATION PIPES ARE NOT USED.	3.0M
(X)	OVER SUNDECKS, BALCONIES, TERRACES ACCESSIBLE TO PERSONS ONLY.	3.0M
(XI)	FROM BLANK WALLS OF BUILDINGS OR OTHER STRUCTURES AND ANY POINT OF THE OPENING OF ANY WINDOW (SEE D-OH1-0359-SD-001, 0360-SD-001 AND D-OH1-0283-SD-001).	1.0M

5. USE OF BARE CONDUCTORS

BARE CONDUCTORS ARE NOT PERMITTED FOR NEW SERVICES OR AERIAL CONSUMERS MAINS. WHERE EXISTING BARE CONDUCTORS REQUIRE AUGMENTING THEY SHOULD BE REPLACED WITH INSULATED CONDUCTORS.

WHEN POLES ARE RENEWED ON EXISTING LINES WITH BARE CONDUCTORS, GROUND CLEARANCES SHOULD BE ESTABLISHED IN ACCORDANCE WITH SECTION 3.6 AND CONDUCTOR VERTICAL SEPARATION SHOULD BE IN ACCORDANCE WITH THE FOLLOWING TABLE.

VERTICAL POLE TOP SPACING

BARE CONDUCTOR (mm)	SPAN RANGE (m)
400	TO 10
500	10 TO 25
600	25 TO 45
700	45 TO 60

REFERENCE DRAWINGS
D-OH1-0359-SD-001, D-OH1-0360-SD-001, D-OH1-0283-SD-001,
HORIZONTAL CONDUCTOR SEPARATION SHOULD BE IN ACCORDANCE WITH DRAWING NO. D-OH1-0260-SD-001.

DIMENSIONS ARE IN MILLIMETRES UNLESS OTHERWISE STATED

ALTERATIONS
ORIGINAL ISSUE
REPRODUCED FROM DRG No. D-OH1-1.6/2

TasNetworks

DRAWN	C5 PRO-SOLUTIONS
DESIGNED BY	TASNETWORKS
CHECKED BY	C5 PRO-SOLUTIONS
APPROVED BY	TASNETWORKS
DATE APPROVED	30/MAR/17

© Tasmanian Networks PTY. LTD.
trading as TasNetworks
ABN: 24 167 357 299

NO PART OF THIS DRAWING MAY BE REPRODUCED, STORED IN A RETRIEVAL SYSTEM IN ANY FORM, OR TRANSMITTED BY ANY MEANS WITHOUT THE PRIOR PERMISSION OF TASNETWORKS

TITLE
O/H SERVICES & CONSUMERS MAINS
PRINCIPLES OF DESIGN & CONSTRUCTION

SCALE NTS

A4

D - OH1 - 0351 - SD - 001

REVISION A

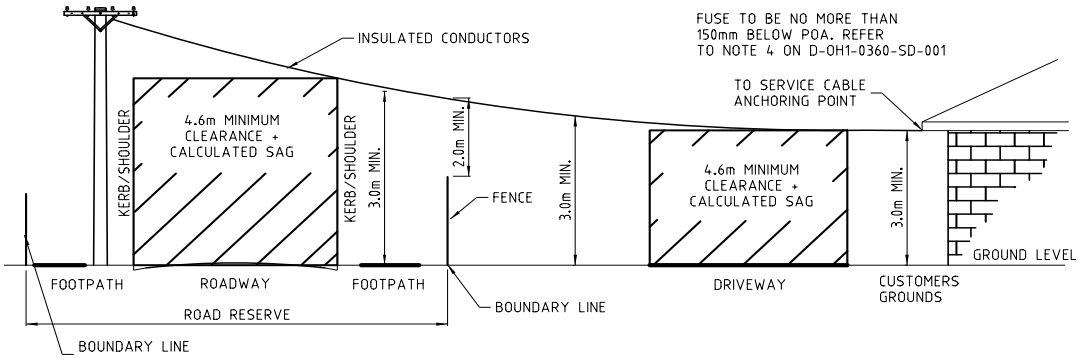

NB. "AN ALLOWANCE FOR SAG" MEANS THAT THE CLEARANCE HAS BEEN INCREASED BY AN AMOUNT EQUIVALENT TO THE SAG PRODUCED IF THE CONDUCTOR OPERATING TEMPERATURE WERE TO RISE TO THE MAXIMUM ALLOWABLE OF 75 DEGREES CELCIUS. (SEE D-OH1-0370-SD-001, 0371-SD-001)

TYPICAL SINGLE SPAN SERVICE

SERVICE OVER HAZARDOUS AREAS

SERVICES CANNOT BE INSTALLED OVER AREAS CLASSED AS HAZARDOUS. THESE SERVICES ARE NEGOTIATED IN ACCORDANCE WITH AS/NZ 3000.

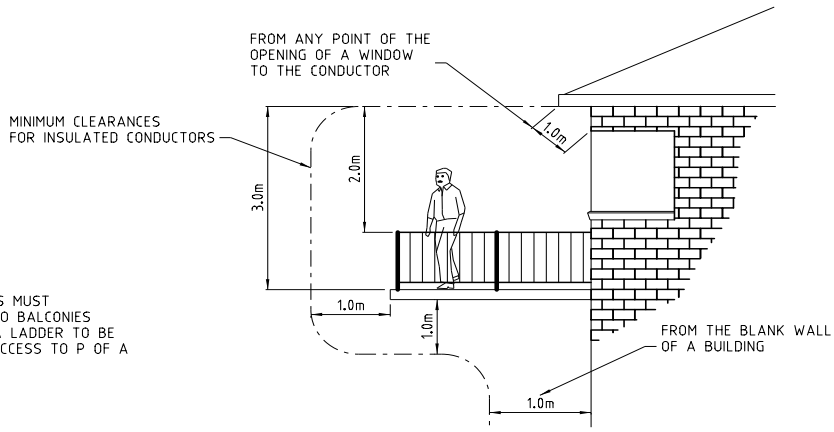

NOTE.
EXTERNAL ACCESS MUST BE PROVIDED ONTO BALCONIES ETC. TO ALLOW A LADDER TO BE CARRIED UP SO ACCESS TO P OF A IS OBTAINED.

TYPICAL SERVICE CLEARANCES FROM A BUILDING

REFERENCE DRAWINGS
D-OH1-0360-SD-001
D-OH1-0370-SD-001 AND 0371-SD-001

DIMENSIONS ARE IN MILLIMETRES UNLESS OTHERWISE STATED

ALTERATIONS

ORIGINAL ISSUE

REPRODUCED FROM DRG No. D-OH1-1.6/14

TasNetworks

DRAWN	CS PRO-SOLUTIONS
DESIGNED BY	TASNETWORKS
CHECKED BY	CS PRO-SOLUTIONS
APPROVED BY	TASNETWORKS
DATE APPROVED	30/MAR/17

© Tasmanian Networks PTY. LTD. trading as TasNetworks
ABN: 24 167 357 299

NO PART OF THIS DRAWING MAY BE REPRODUCED, STORED IN A RETRIEVAL SYSTEM IN ANY FORM, OR TRANSMITTED BY ANY MEANS WITHOUT THE PRIOR PERMISSION OF TASNETWORKS

TITLE
O/H SERVICES & CONSUMERS MAINS CLEARANCE REQUIREMENTS

SCALE NTS

A4

D - OH1 - 0359 - SD - 001

REVISION A

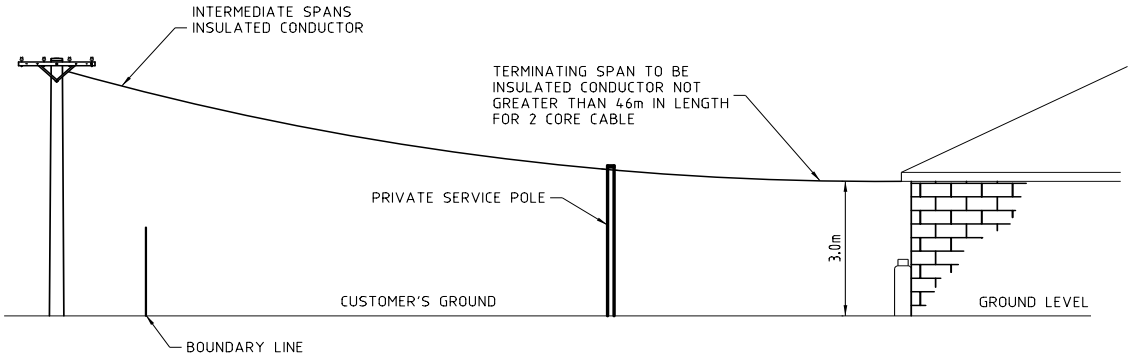

TYPICAL MULTI SPAN SERVICE

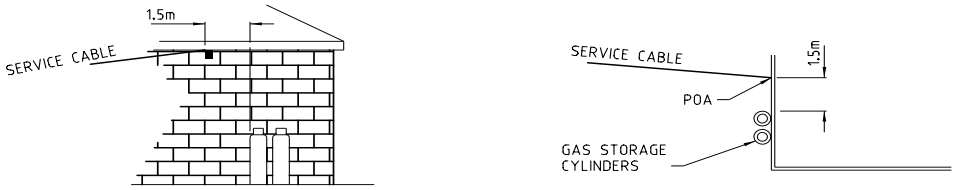

CLEARANCE BETWEEN SERVICE & LPG

CROSSING OVER L.P.G. STORAGE TANKS/CYLINDERS WITHIN 1.5m MEASURED HORIZONTALLY FROM THE VERTICAL PLANE OF CONDUCTORS MUST BE AVOIDED. (AS PER SEC 3.2.4 OF AS 1596). ALSO ENSURE COMPLIANCE WITH AS/NZS 3000 SECTION 7 PART 7.9

NOTES

1. ALL DIMENSIONS SHOWN ARE MINIMUM CLEARANCES IN METRES, TO WHICH A CONDUCTOR MAY SWING OR SAG. SEE D-OH1-0351-SD-001 & D-OH1-0283-SD-001.
2. WHEREVER POSSIBLE SERVICES SHOULD BE LOCATED TO AVOID DRIVEWAYS ON CUSTOMER'S PROPERTY.
3. TASNETWORKS POLICY IS NOT TO PERMIT ROUTING OF SERVICES OVER ROTARY CLOTHES LINES, RADIO OR TV ANTENNAE AND SWIMMING POOLS.
4. A CONDUCTOR 'DRIP LOOP' OF NOT MORE THAN 150mm IS REQUIRED BELOW THE POINT OF ATTACHMENT.
5. NORMAL TERMINATING SPAN TO BE TWISTED INSULATED CONDUCTOR NO GREATER THAN 46m FOR 2C 25mm² LVABC AND 33m FOR 4C 25mm² LVABC.
6. IN AREAS WHERE SAILING CRAFT, FARM MACHINERY OR IRRIGATION PIPES MAY BE USED, A CLEARANCE OF AT LEAST 5.5 METRES ABOVE GROUND IS REQUIRED. IN SITUATIONS WHERE THE CLEARANCE AT THE POINT OF ATTACHMENT CANNOT BE ACHIEVED, EITHER INSTALL A POLE ADJACENT TO THE BUILDING OR INSTALL UNDERGROUND CONSUMERS MAINS TO TERMINATING POLE.
7. AT NO POINT IS THE CLEARANCE OVER CUSTOMER'S GROUND OF THE INSULATED SERVICE CONDUCTOR TO BE LESS THAN 3 m WHEN OPERATING AT MAXIMUM TEMPERATURE. (SEE ALSO D-OH1-0351-SD-001 & D-OH1-0283-SD-001).

DIMENSIONS ARE IN MILLIMETRES
UNLESS OTHERWISE STATED

ALTERATIONS

ORIGINAL ISSUE

REPRODUCED FROM DRG No. D-OH1-1.6/15

TasNetworks

DRAWN	C5 PRO-SOLUTIONS
DESIGNED BY	TASNETWORKS
CHECKED BY	C5 PRO-SOLUTIONS
APPROVED BY	TASNETWORKS
DATE APPROVED	04/APR/17

© Tasmanian Networks PTY. LTD.
trading as TasNetworks
ABN: 24 167 357 299

NO PART OF THIS DRAWING MAY BE REPRODUCED, STORED IN A RETRIEVAL SYSTEM IN ANY FORM, OR TRANSMITTED BY ANY MEANS WITHOUT THE PRIOR PERMISSION OF TASNETWORKS

TITLE
O/H SERVICES & CONSUMERS MAINS
CLEARANCE REQUIREMENTS

SCALE NTS

A4

D - OH1 - 0360 - SD - 001

REVISION A

SERVICE ALLOWED
SERVICE NOT ALLOWED

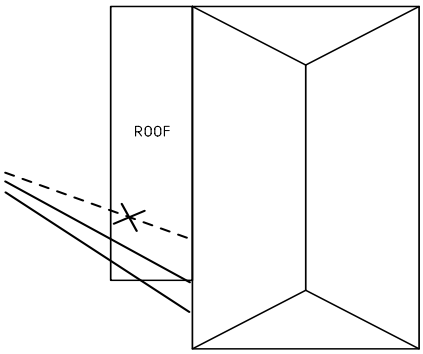

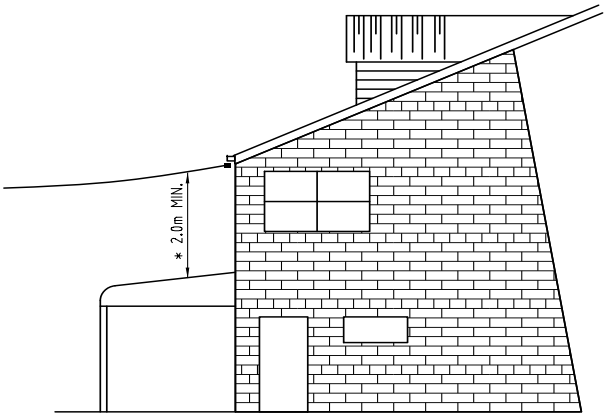

SERVICES OVER ROOFED-AREAS ARE RESTRICTED TO APPLICATIONS THAT ARE UNAVOIDABLE BECAUSE LINESPERSONS MAYBE PLACED IN POTENTIALLY UNSAFE SITUATIONS WHEN SERVICE REPAIRS ARE REQUIRED EG:

LINESPERSONS COULD BE FORCED TO WORK FROM AN EARTHED PLATFORM (METAL ROOF) INSTEAD OF AN INSULATED PLATFORM (EWP OR LADDER).

VERANDAHS MAY NOT BE STRUCTURALLY SOUND.

DAMAGE MAY BE SUSTAINED TO THE ROOF AREA WHEN ACCESS IS REQUIRED.

SERVICE CONDUCTOR MAY COME IN CONTACT WITH THE ROOF DUE TO CONDUCTOR MOVEMENT DUE TO SEVERE WIND CONDITIONS.

SERVICE OVER ROOFED AREAS ARE ONLY PERMITTED WHEN THE FOLLOWING CONDITIONS ARE MET:

THE SERVICE ROUTE OVER THE ROOF IS UNAVOIDABLE.

THE POINT OF ATTACHMENT AND SERVICE FUSE(S) MUST BE ACCESSIBLE FROM A LADDER FIRMLY FOOTED ON THE GROUND.

SERVICE FUSE(S) MUST BE ACCESSIBLE DIRECTLY FROM GROUND LEVEL TO ENABLE DISCONNECTION OF SUPPLY BY FUSE STICKS.

* THE MINIMUM CLEARANCE BETWEEN THE ROOF AND THE SERVICE LINE IS 2.0M AFTER SAG AND CABLE SWING IS TAKEN INTO CONSIDERATION. EG VERTICAL CLEARANCE OVER A ROOF SITUATED UNDER THE CENTRE OF A 46M SPAN OF 25MM2 2 CORE AL XLPE, WILL NORMALLY MEAN A VERTICAL CLEARANCE OF 2.3M AT A STRINGING TEMPERATURE OF 15°C.

THE WIRING CONNECTING TASNETWORKS AERIAL SERVICE CONDUCTORS TO THE CUSTOMERS INSTALLATION IS REQUIRED TO BE AT LEAST ARMS LENGTH, (NOMINALLY 2.5M VERTICALLY 1.25M HORIZONTALLY) FROM GROUND OR ELEVATED AREA. REFER TO AS/NZS WIRING RULES 3000 FIG 1.1.

EXTERNAL ACCESS MUST BE PROVIDED ON TO BALCONIES ETC TO ALLOW A LADDER TO BE CARRIED UP SO ACCESS TO THE POINT OF ATTACHMENT IS OBTAINED.

NOTES
1. THIS DRAWING IS INCLUDED IN THE SERVICE AND INSTALLATION RULES.

DIMENSIONS ARE IN MILLIMETRES UNLESS OTHERWISE STATED

ALTERATIONS
ORIGINAL ISSUE
REPRODUCED FROM DRG No. D-OH1-1.6/59

TasNetworks

DRAWN	C5 PRO-SOLUTIONS
DESIGNED BY	TASNETWORKS
CHECKED BY	C5 PRO-SOLUTIONS
APPROVED BY	TASNETWORKS
DATE APPROVED	25/MAR/17

© Tasmanian Networks PTY. LTD. trading as TasNetworks
ABN: 24 167 357 299

NO PART OF THIS DRAWING MAY BE REPRODUCED, STORED IN A RETRIEVAL SYSTEM IN ANY FORM, OR TRANSMITTED BY ANY MEANS WITHOUT THE PRIOR PERMISSION OF TASNETWORKS

TITLE
O/H SERVICES & CONSUMER MAINS
SERVICE CABLE OVER BUILDINGS

SCALE NTS

A4

D - OH1 - 0372 - SD - 001

REVISION A

C.2 Clearance to other lines

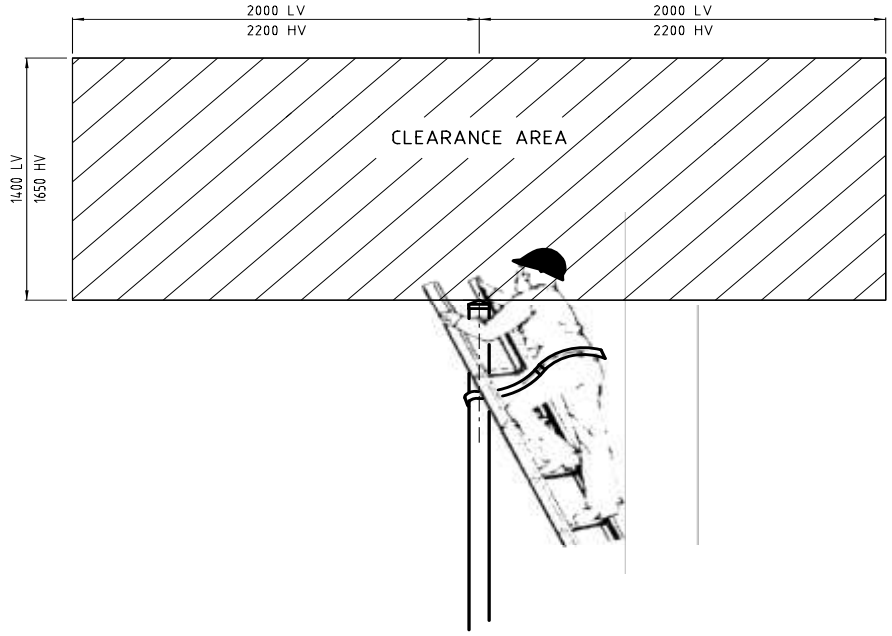

SERVICE POLES IN THE VICINITY OF BARE OVERHEAD CONDUCTORS ARE TO ACHIEVE THE CLEARANCES SHOWN SHADED.

NOTES
1. ALL DIMENSIONS SHOWN ARE MINIMUM CLEARANCES IN MILLIMETRES, TO WHICH A CONDUCTOR MAY SWING OR SAG.
2. THE CLEARANCES SHOWN ARE IN ACCORDANCE WITH AS 2067

DIMENSIONS ARE IN MILLIMETRES UNLESS OTHERWISE STATED

ALTERATIONS
ORIGINAL ISSUE
REPRODUCED FROM DRG No. D-OH1-1.6/79

TasNetworks

DRAWN	CS PRO-SOLUTIONS
DESIGNED BY	TASNETWORKS
CHECKED BY	CS PRO-SOLUTIONS
APPROVED BY	TASNETWORKS
DATE APPROVED	23/MAR/17

© Tasmanian Networks PTY. LTD. trading as TasNetworks
ABN: 24 167 357 299
NO PART OF THIS DRAWING MAY BE REPRODUCED, STORED IN A RETRIEVAL SYSTEM IN ANY FORM, OR TRANSMITTED BY ANY MEANS WITHOUT THE PRIOR PERMISSION OF TASNETWORKS

TITLE
O/H SERVICE POLES & BARE MAINS - CLEARANCE REQUIREMENTS

SCALE NTS

A4

D - OH1 - 0375 - SD - 001

REVISION A

Appendix D Service poles

Customer installed service poles must comply with the more onerous of AS/NZS 3000 or AS/NZS 7000.

Drawings D-OH1-0356-SD-001 and D-OH1-0357-SD-001 below show examples of service poles and footings. The preferred *customer service pole* is a galvanised steel square section set in a concrete foundation.

The nature of the pole foundation is dependent on the soil type into which the pole is being erected and these drawings are provided as a guide rather than a design to fit all situations.

ACCEPTABLE POLE TYPES AND STRENGTHS

POLE LENGTH OVERALL m	POLE TYPE	MINIMUM GIRTH mm		DEPTH IN GROUND 'D' m	HEIGHT OF POLE ABOVE GROUND m	MAX. ALLOWABLE HORIZONTAL FORCE AT POLE TOP kN
		AT TOP	2m FROM BUTT (OVER SAPWOOD)			
8.0	GALVANISED STEEL 125x125x5.0 SHS GRADE 350	——	——	1.4	6.6	2.0
8.0	P.I. HARDWOOD (4kN)	635	810	1.5	6.5	4.0
8.0	P.I. HARDWOOD (6kN)	635	900	1.5	6.5	6.0
9.0	P.I. HARDWOOD (4kN)	635	860	1.5	7.5	4.0
9.0	P.I. HARDWOOD (6kN)	750	975	1.65	7.35	6.0
10.5	P.I. HARDWOOD (4kN)	655	920	1.65	8.85	4.0
10.5	P.I. HARDWOOD (6kN)	775	1040	1.8	8.7	6.0
12.0	P.I. HARDWOOD (4kN)	675	975	1.8	10.2	4.0
12.0	P.I. HARDWOOD (6kN)	800	1100	1.8	10.2	6.0

NOTE

A PRIVATE POLE THAT IS NOT INCLUDED IN THE ABOVE LIST IS NOT PERMITTED UNLESS IT HAS BEEN CERTIFIED BY A RECOGNISED STRUCTURAL ENGINEER SPECIALISING IN WOOD POLE STRENGTHS. THE ENGINEER SHALL SPECIFY THE FOLLOWING:

1. THE MINIMUM DIAMETER AT GROUND LEVEL AND AT THE POLE TOP.
2. THE STRENGTH RATING OF THE POLE (NOMINATED IN KN AT THE TIP, MARKED PERMANENTLY ON THE POLE AT 3450mm FROM THE BUTT.)
3. THE WALL THICKNESS FOR STEEL POLES (STEEL TO BE GALVANISED)
4. THE REQUIRED BURIED DEPTH. (A MARK IS TO PERMANENTLY LABELLED AT 3450MM FROM THE BUTT)
5. THE SPECIES OF TIMBER IF A NATURAL WOOD POLE IS USED (PERMANENTLY MARKED ON THE POLE)
6. THE MINIMUM RIM THICKNESS OF WOOD FOR A SAFETY FACTOR OF 2.5, 1.5 AND 1.0
7. THE TREATMENT AT AND BELOW GROUND LINE TO INHIBIT THE PROMOTION OF CORROSION, SOFT ROT AND HEART ROT (WHICHEVER IS APPLICABLE)

DIMENSIONS ARE IN MILLIMETRES UNLESS OTHERWISE STATED

ALTERATIONS

ORIGINAL ISSUE

REPRODUCED FROM DRG No. D-OH1-1.6/7

GENERAL NOTE CHANGE

REV B

TasNetworks

© Tasmanian Networks PTY. LTD. trading as TasNetworks ABN: 24 167 357 299

NO PART OF THIS DRAWING MAY BE REPRODUCED, STORED IN A RETRIEVAL SYSTEM IN ANY FORM, OR TRANSMITTED BY ANY MEANS WITHOUT THE PRIOR PERMISSION OF TASNETWORKS

DRAWN	CS PRO-SOLUTIONS
DESIGNED BY	TASNETWORKS
CHECKED BY	CS PRO-SOLUTIONS
APPROVED BY	TASNETWORKS
DATE APPROVED	30/MAR/11

TITLE O/H SERVICES & CONSUMERS MAINS POLES FOR O/H CONSUMERS MAINS

SCALE NTS

A4

D - OH1 - 0356 - SD - 001

REVISION B

NOTES

THE STEEL SECTIONS LISTED IN THE TABLE ARE TO BE CONTINUOUS LENGTHS WITHOUT JOINS AND ARE TO BE DIRECT BURIED TO SPECIFIED DEPTH SET IN CONCRETE AS SHOWN BELOW.

ALTERNATIVE STEEL SECTIONS HAVING EQUIVALENT STRENGTH IN ALL DIRECTIONS TO THE LISTED POLES, MAY BE USED SUBJECT TO APPROVAL AND RECEIPT OF A CERTIFICATE FROM A REGISTERED STRUCTURAL ENGINEER.
THE FOLLOWING ARE NOT PERMITTED-:
FABRICATED STEEL POLES
BASE PLATE MOUNTED STEEL POLES
ALL STEEL PLATES ARE TO BE GALVANISED IN ACCORDANCE WITH AS4680.

TO CONFORM TO AS4677 STEEL UTILITY POLES, THE POLE SHALL HAVE THE FOLLOWING DETAILS PERMANENTLY ETCHED/FIXED TO THE POLE IN A MINIMUM OF 5mm HIGH LETTERING
(1) MANUFACTURERS IDENTIFICATION
(2) YEAR OF MANUFACTURE
(3) POLE LENGTH/MASS m/kg
(4) MAXIMUM TOP LOAD kN
(5) A DEPTH MARKER 3m FROM THE BUTT END

WOOD POLES
A) PRESSURE IMPREGNATED WOOD POLES-:
ALL P.I. WOOD POLES SHALL COMPLY WITH TASNETWORKS SPECIFICATIONS.
B) THE USE OF GROWING, DEAD OR 'RINGED' TREES AS POLES IS PROHIBITED.
C) POLE DIMENSIONS-:
THE DIMENSIONS OF THE POLE SHALL BE IN ACCORDANCE WITH THE TABLE ON DRG D-OH1-0356-SD-001.
D) SECOND HAND POLES-:
RECOVERED POLES GREATER THAN 15 YEARS OF AGE SHALL NOT BE USED
E) DATE OF ERECTION TO BE STAMPED ON LETTER 'P' FIXED TO POLE.

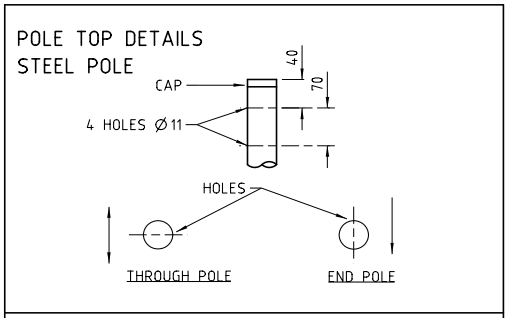

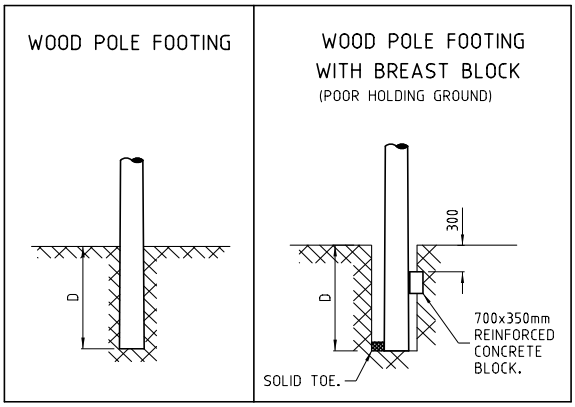

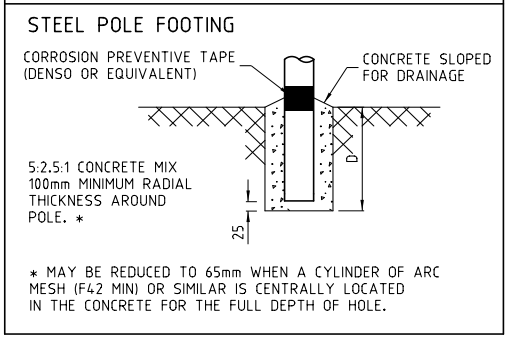

DIMENSIONS ARE IN MILLIMETRES
UNLESS OTHERWISE STATED

ALTERATIONS
ORIGINAL ISSUE
REPRODUCED FROM DRG No. D-OH1-1.6/8

TasNetworks

DRAWN	C5 PRO-SOLUTIONS
DESIGNED BY	TASNETWORKS
CHECKED BY	C5 PRO-SOLUTIONS
APPROVED BY	TASNETWORKS
DATE APPROVED	30/MAR/17

© Tasmanian Networks PTY. LTD.
trading as TasNetworks
ABN: 24 167 357 299

NO PART OF THIS DRAWING MAY BE REPRODUCED, STORED IN A RETRIEVAL SYSTEM IN ANY FORM, OR TRANSMITTED BY ANY MEANS WITHOUT THE PRIOR PERMISSION OF TASNETWORKS

TITLE
O/H SERVICES & CONSUMER MAINS
POLES FOR O/H CONSUMERS MAINS

SCALE NTS

A4

D - OH1 - 0357 - SD - 001

REVISION A

Appendix E Attachment heights

Extract from the *TasNetworks* Overhead Design and Construction Standard.

E.1 Low voltage attachment heights for *TasNetworks* pole assets

TasNetworks Pole	Pole Assets	Approx Height from Pole Top	Pole Depth in Ground	Low Voltage Attachment Height Above Ground
(m)		(m)	(m)	(m)
8.0 SHS	LV ABC	0.15	1.4	6.5
9.0	Bare Low Voltage	0	1.5	7.5
9.0	LV ABC	0.15	1.5	7.3
10.5	Bare Low Voltage	0	1.7	8.8
10.5	LV ABC	0.15	1.7	8.7
10.5	HV + Bare LV	1.4	1.7	7.4
10.5	HV + LV ABC	1.4	1.7	7.4
12.0	HV + Bare LV	1.4	1.8	8.8
12.0	HV + LV ABC	1.4	1.8	8.8
12.0	HV + 10-50 kVA Transformer + Bare LV	3.1	1.8	7.1
12.0	HV + 10-50 kVA Transformer + LV ABC	3.3	1.8	6.9
12.0	HV + 300 kVA Transformer + Bare LV	4.1	1.8	6.1
12.0	HV + 300 kVA Transformer + LV ABC	4.1	1.8	6.1

These heights shown are approximate and do not apply for all *TasNetworks* poles as local conditions may require differing heights for *TasNetworks* assets.

Appendix F Maximum spans

Extract from the *TasNetworks* Overhead Design and Construction Standard.

F.1 Maximum spans for unstayed termination pole

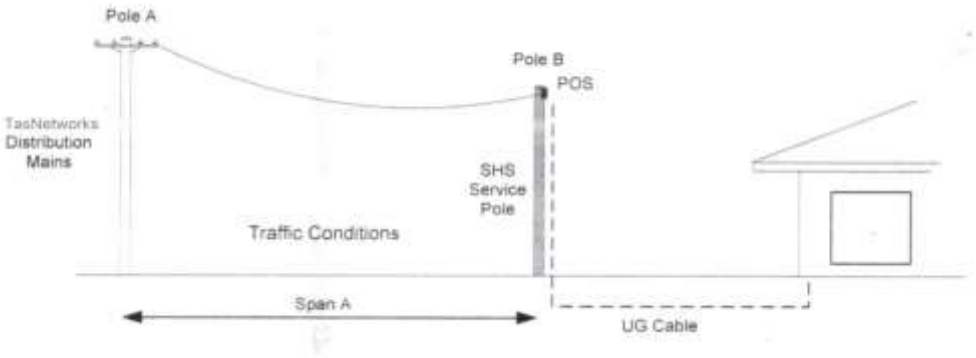

The *Service Pole* **location will be dependent** primarily on:

- Achieving acceptable conductor ground clearance for the traffic conditions under Span A
- Ensuring that the loading at the top of the pole is not greater that 2 kN
- Ensuring that the clamping force on the conductor's insulation does not exceed 28% of the Conductor's designated Breaking Load (CBL)

Notes:

- Ground clearance is based on an initial conductor stringing of 5.6% CBL at 5°C, and a conductor operating temperature of 75ºC
- The Pole-Top Force is based on 500 Pa 15°C wind force on Conductor and 1200 Pa force due to wind on square pole.
- The effect of pole wind loading on the resultant conductor loading has been approximated to being perpendicular to the resultant conductor force.

Traffic Conditions: (as used in the following tables)

1. Over roads, or in caravan parks or where farm machinery could operate
2. Over footpaths or over driveways
3. Over ground that has no vehicle traffic or has no footpaths or driveways

Note: Traffic conditions assumed to be **under lowest point** of conductor sag.

8 metre 2 kN 125 mm x 125mm SHS Service Termination Pole (Pole B)

6.5m attachment height

2 core and 4 core 25 mm^2 LVABC

Attachment Height at *TasNetworks* Pole (Pole A)	2 Core 25 mm2 LVABC (Span A)			4 Core 25 mm2 LVABC (Span A)		
	Traffic Conditions					
	1	2	3	1	2	3
(m)	(m)	(m)	(m)	(m)	(m)	(m)
5.5	20	42	60	20	30	30
5.8	23	45	60	23	30	30
6.0	26	46	60	26	30	30
6.3	30	49	60	30	30	30
6.5	32	50	60	30	30	30
6.8	35	52	60	30	30	30
7.0	37	54	60	30	30	30
7.3	40	56	60	30	30	30
7.5	42	57	60	30	30	30
7.8	45	59	60	30	30	30
8.0	46	60	60	30	30	30
8.3	49	60	60	30	30	30
8.5	50	60	60	30	30	30

F.2 Maximum spans for unstayed fascia/raiser bracket termination

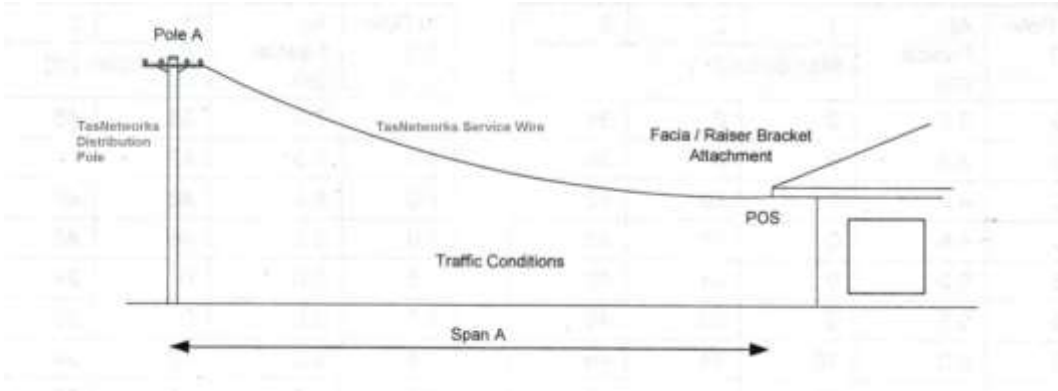

The facia attachment **location will be dependent** primarily on:

- Achieving acceptable conductor ground clearance for the traffic conditions under Span A
- Ensuring that the loading at the fascia attachment or raiser bracket is not greater that 1 kN

Notes:

- Ground clearance is based on an initial conductor stringing of 4.5% Conductor's designated Breaking Load (CBL) at 5°C, and a conductor operating temperature of 75°C for 2 Core 25 mm^2 LVABC.
- Ground clearance is based on an initial conductor stringing of and 3.35% CBL at 5°C, and a conductor operating temperature of 75°C for 4 Core 25 mm^2 LVABC.
- The force at the facia is based on a 350 Pa 15°C wind force on the conductor.

Traffic Conditions: (as used in the following tables)

1. Over roads, or in caravan parks or where farm machinery could operate
2. Over footpaths or over driveways
3. Over ground that has no vehicle traffic or has no footpaths or driveways

Notes:

- Traffic conditions assumed to be under lowest point of conductor sag
- Clearances and spans are for flat ground only
- Ground clearance is based on an initial conductor stringing reference of 4.5% CBL at 5°C and a conductor operating temperature of 75°C

2 core 25 mm² LVABC

Attachment Height		Traffic Conditions		
At Pole: (m)	At Fascia: (m)	1	2	3
		Max Span (m)		
5.5	3.0	0	0	34
5.5	3.5	0	0	39
5.5	4.0	0	10	42
5.5	4.5	0	18	46
5.5	5.0	0	24	46
5.5	5.5	0	30	46
5.5	6.0	10	34	46
5.5	6.5	18	39	46
5.5	7.0	24	42	46
5.5	7.5	30	46	46
5.5	8.0	34	46	46
5.5	8.5	39	46	46
6.0	3.0	0	0	39
6.0	3.5	0	10	42
6.0	4.0	0	18	46
6.0	4.5	0	24	46
6.0	5.0	0	30	46
6.0	5.5	10	34	46
6.0	6.0	18	39	46
6.0	6.5	24	42	46
6.0	7.0	30	46	46
6.0	7.5	34	46	46
6.0	8.0	39	46	46
6.0	8.5	42	46	46
6.5	3.0	0	10	42
6.5	3.5	0	18	46
6.5	4.0	0	24	46
6.5	4.5	0	30	46
6.5	5.0	10	34	46
6.5	5.5	18	39	46
6.5	6.0	24	42	46
6.5	6.5	30	46	46
6.5	7.0	34	46	46
6.5	7.5	39	46	46
6.5	8.0	42	46	46
6.5	8.5	46	46	46
7.0	3.0	0	18	46
7.0	3.5	0	24	46
7.0	4.0	0	30	46
7.0	4.5	10	34	46
7.0	5.0	18	39	46
7.0	5.5	24	42	46
7.0	6.0	30	46	46
7.0	6.5	34	46	46

Attachment Height		Traffic Conditions		
At Pole: (m)	At Fascia: (m)	1	2	3
		Max Span (m)		
7.0	7.0	39	46	46
7.0	7.5	42	46	46
7.0	8.0	46	46	46
7.0	8.5	46	46	46
7.5	3.0	0	24	46
7.5	3.5	0	30	46
7.5	4.0	10	34	46
7.5	4.5	18	39	46
7.5	5.0	24	42	46
7.5	5.5	30	46	46
7.5	6.0	34	46	46
7.5	6.5	39	46	46
7.5	7.0	42	46	46
7.5	7.5	46	46	46
7.5	8.0	46	46	46
7.5	8.5	46	46	46
8.0	3.0	0	30	46
8.0	3.5	10	34	46
8.0	4.0	18	39	46
8.0	4.5	24	42	46
8.0	5.0	30	46	46
8.0	5.5	34	46	46
8.0	6.0	39	46	46
8.0	6.5	42	46	46
8.0	7.0	46	46	46
8.0	7.5	46	46	46
8.0	8.0	46	46	46
8.0	8.5	46	46	46
8.5	3.0	10	34	46
8.5	3.5	18	39	46
8.5	4.0	24	42	46
8.5	4.5	30	46	46
8.5	5.0	34	46	46
8.5	5.5	39	46	46
8.5	6.0	42	46	46
8.5	6.5	46	46	46
8.5	7.0	46	46	46
8.5	7.5	46	46	46
8.5	8.0	46	46	46
8.5	8.5	46	46	46

4 core 25 mm² LVABC

Attachment Height		Traffic Conditions		
At Pole: (m)	At Fascia: (m)	1	2	3
		Max Span (m)		
5.5	3.0	0	0	31
5.5	3.5	0	0	33
5.5	4.0	0	10	33
5.5	4.5	0	17	33
5.5	5.0	0	22	33
5.5	5.5	0	27	33
5.5	6.0	10	31	33
5.5	6.5	17	33	33
5.5	7.0	22	33	33
5.5	7.5	27	33	33
5.5	8.0	31	33	33
5.5	8.5	33	33	33
6.0	3.0	0	0	33
6.0	3.5	0	10	33
6.0	4.0	0	17	33
6.0	4.5	0	22	33
6.0	5.0	0	27	33
6.0	5.5	10	31	33
6.0	6.0	17	33	33
6.0	6.5	22	33	33
6.0	7.0	27	33	33
6.0	7.5	31	33	33
6.0	8.0	33	33	33
6.0	8.5	33	33	33
6.5	3.0	0	10	33
6.5	3.5	0	17	33
6.5	4.0	0	22	33
6.5	4.5	0	27	33
6.5	5.0	10	31	33
6.5	5.5	17	33	33
6.5	6.0	22	33	33

Attachment Height		Traffic Conditions		
At Pole: (m)	At Fascia: (m)	1	2	3
		Max Span (m)		
7.5	3.0	0	22	33
7.5	3.5	0	27	33
7.5	4.0	10	31	33
7.5	4.5	17	33	33
7.5	5.0	22	33	33
7.5	5.5	27	33	33
7.5	6.0	31	33	33
7.5	6.5	33	33	33
7.5	7.0	33	33	33
7.5	7.5	33	33	33
7.5	8.0	33	33	33
7.5	8.5	33	33	33
8	3.0	0	27	33
8	3.5	10	31	33
8	4.0	17	33	33
8	4.5	22	33	33
8	5.0	27	33	33
8	5.5	31	33	33
8	6.0	33	33	33
8	6.5	33	33	33
8	7.0	33	33	33
8	7.5	33	33	33
8	8.0	33	33	33
8	8.5	33	33	33
8.5	3.0	10	31	33
8.5	3.5	17	33	33
8.5	4.0	22	33	33
8.5	4.5	27	33	33
8.5	5.0	31	33	33
8.5	5.5	33	33	33
8.5	6.0	33	33	33

6.5	6.5	27	33	33
6.5	7.0	31	33	33
6.5	7.5	33	33	33
6.5	8.0	33	33	33
6.5	8.5	33	33	33
7.0	3.0	0	17	33
7.0	3.5	0	22	33
7.0	4.0	0	27	33
7.0	4.5	10	31	33
7.0	5.0	17	33	33
7.0	5.5	22	33	33
7.0	6.0	27	33	33
7.0	6.5	31	33	33
7.0	7.0	33	33	33
7.0	8.5	33	33	33

8.5	6.5	33	33	33
8.5	7.0	33	33	33
8.5	7.5	33	33	33
8.5	8.0	33	33	33
8.5	8.5	33	33	33

F.3 Maximum spans for unstayed intermediate service pole 125x125x5 mm

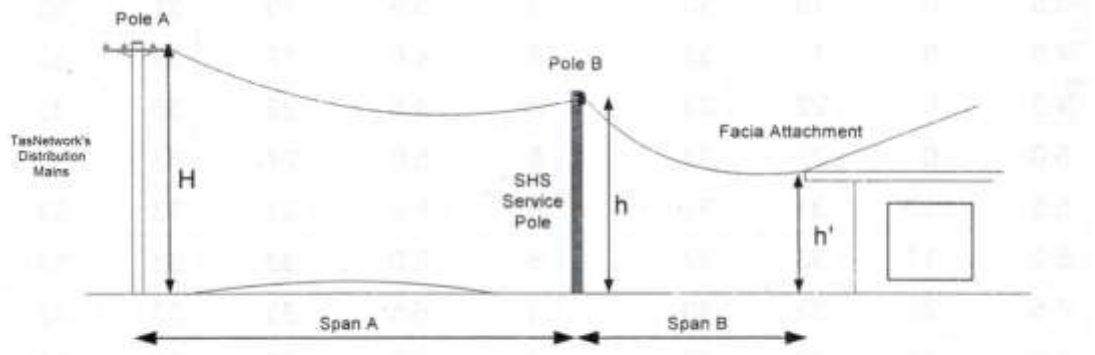

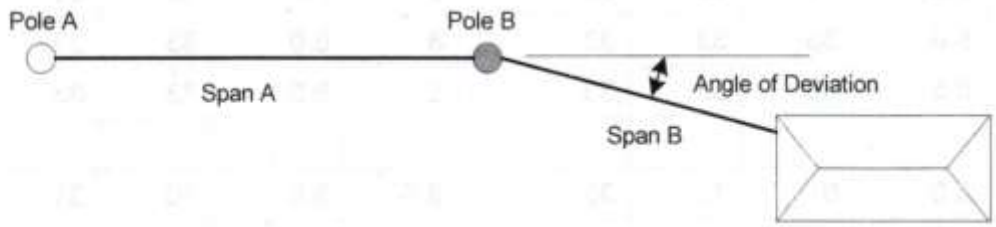

The Service Pole location will be dependent primarily on:

- Achieving acceptable conductor ground clearance for the traffic conditions of the spans either side of the pole.
- Ensuring that the loading at the top of the service pole is not greater that 2 kN
- Ensuring that the loading on any building support is not greater that 1 kN
- Ensuring that the clamping force on the conductor's insulation does not exceed 28% of the Conductor's Designated Breaking Load (CBL)
- Ensuring that the pole has adequate footing strength to remain vertical for its full life.

2 Core 25 mm^2 LVABC over road (A) and driveway or footpath (B)

Span A: Over Road

Span B: Over Driveway or Footpath

Fascia attachment height (h): 4.5 m and greater

Service Pole attachment height (h): 6.5 m

Note:

- Max Span B length to achieve required ground clearance is 15 m.
- For angles of deviation greater than 60°, consult *TasNetworks*
- Flat ground has been assumed

H (m)	Ang of Dev Up to (Deg)	Span A Up to (m)	Span B Up to (m)
5.5	30	20	15
5.5	40	20	15
5.5	50	18	10
5.5	50	13	15
5.5	60	12	10
5.5	60	7	15
6	30	28	15
6	40	28	10
6	40	23	15
6	50	18	10
6	50	13	15
6	60	12	10
6	60	7	15
6.5	30	33	15
6.5	40	28	10
6.5	40	23	15
6.5	50	18	10
6.5	50	13	15
6.5	60	12	10
6.5	60	7	15
7.0	30	39	15
7.0	40	28	10
7.0	40	23	15
7.0	50	18	10
7.0	50	13	15
7.0	60	12	10
7.0	60	7	15

H (m)	Ang of Dev Up to (Deg)	Span A Up to (m)	Span B Up to (m)
7.5	30	43	10
7.5	30	41	15
7.5	40	28	10
7.5	40	23	15
7.5	50	18	10
7.5	50	13	15
7.5	60	12	10
7.5	60	7	15
8.0	20	48	15
8.0	30	46	10
8.0	30	41	15
8.0	40	28	10
8.0	40	23	15
8.0	50	18	10
8.0	50	13	15
8.0	60	12	10
8.0	60	7	15
8.5	20	51	15
8.5	30	46	10
8.5	30	41	15
8.5	40	28	10
8.5	40	23	15
8.5	50	18	10
8.5	50	13	15
8.5	60	12	10
8.5	60	7	15

2 Core 25 mm^2 LVABC over road (A) and untrafficked land (B)

Span A: Over Road

Span B: Over Untrafficked Land:

Fascia attachment height (h): 3 m and greater

Service Pole attachment height (h): 6.5 m

Note:

- Max Span B length to achieve required ground clearance is 43 m.
- For Angles of Deviation greater than 60°, consult *TasNetworks*.
- Flat ground has been assumed

H (m)	Ang of Dev Up to (Deg)	Span A Up to (m)	Span B Up to (m)
5.5	20	20	43
5.5	30	20	35
5.5	30	16	40
5.5	30	13	43
5.5	40	20	15
5.5	40	18	20
5.5	40	13	25
5.5	40	8	30
5.5	50	18	10
5.5	50	13	15
5.5	50	8	20
5.5	60	12	10
5.5	60	7	15
6	20	28	43
6	30	28	25
6	30	26	30
6	30	21	35
6	30	16	40
6	30	13	43
6	40	28	10
6	40	23	15
6	40	18	20
6	40	13	25
6	40	8	30
6	50	18	10
6	50	13	15
6	50	8	20
6	60	12	10
6	60	7	15
6.5	20	33	43
6.5	30	33	20
6.5	30	31	25
6.5	30	26	30
6.5	30	21	35

H (m)	Ang of Dev Up to (Deg)	Span A Up to (m)	Span B Up to (m)
7	60	12	10
7	60	7	15
7.5	20	43	43
7.5	30	43	10
7.5	30	41	15
7.5	30	36	20
7.5	30	31	25
7.5	30	26	30
7.5	30	21	35
7.5	30	16	40
7.5	30	13	43
7.5	40	28	10
7.5	40	23	15
7.5	40	18	20
7.5	40	13	25
7.5	40	8	30
7.5	50	18	10
7.5	50	13	15
7.5	50	8	20
7.5	60	12	10
7.5	60	7	15
8	20	48	43
8	30	46	10
8	30	41	15
8	30	36	20
8	30	31	25
8	30	26	30
8	30	21	35
8	30	16	40
8	30	13	43
8	40	28	10
8	40	23	15
8	40	18	20
8	40	13	25

H (m)	Ang of Dev Up to (Deg)	Span A Up to (m)	Span B Up to (m)
6.5	30	16	40
6.5	30	13	43
6.5	40	28	10
6.5	40	23	15
6.5	40	18	20
6.5	40	13	25
6.5	40	8	30
6.5	50	18	10
6.5	50	13	15
6.5	50	8	20
6.5	60	12	10
6.5	60	7	15
7	20	39	43
7	30	39	15
7	30	36	20
7	30	31	25
7	30	26	30
7	30	21	35
7	30	16	40
7	30	13	43
7	40	28	10
7	40	23	15
7	40	18	20
7	40	13	25
7	40	8	30
7	50	18	10
7	50	13	15
7	50	8	20

H (m)	Ang of Dev Up to (Deg)	Span A Up to (m)	Span B Up to (m)
8	40	8	30
8	50	18	10
8	50	13	15
8	50	8	20
8	60	12	10
8	60	7	15
8.5	20	51	43
8.5	30	46	10
8.5	30	41	15
8.5	30	36	20
8.5	30	31	25
8.5	30	26	30
8.5	30	21	35
8.5	30	16	40
8.5	30	13	43
8.5	40	28	10
8.5	40	23	15
8.5	40	18	20
8.5	40	13	25
8.5	40	8	30
8.5	50	18	10
8.5	50	13	15
8.5	50	8	20
8.5	60	12	10
8.5	60	7	15

4 Core 25 mm^2 LVABC over road (A) and driveway or footpath (B)

Span A: Over Road and

Span B: Over Footpath or Driveway

Fascia attachment height (h): 4.5 m and greater

Service Pole attachment height (h): 6.5 m

Note:

- Max Span A length to allow separate construction or disconnection of Span B is 30 m
- Max Span B length before exceeding clearance over footpath or driveway is 14 m
- For Angles of Deviation greater than 60°, consult *TasNetworks*.
- Flat ground has been assumed

H (m)	Ang of Dev Up to (Deg)	Span A Up to (m)	Span B Up to (m)
5.5	20	20	14
5.5	30	20	14
5.5	40	14	10
5.5	40	10	14
5.5	50	8	10
6	20	28	14
6	30	24	10
6	30	20	14
6	40	14	10
6	40	10	14
6	50	8	10
6.5	20	30	14
6.5	30	24	10
6.5	30	20	14
6.5	40	14	10
6.5	40	10	14
6.5	50	8	10
7	20	30	14
7	30	24	10
7	30	20	14
7	40	14	10
7	40	10	14
7	50	8	10

H (m)	Ang of Dev Up to (Deg)	Span A Up to (m)	Span B Up to (m)
7.5	20	30	14
7.5	30	24	10
7.5	30	20	14
7.5	40	14	10
7.5	40	10	14
7.5	50	8	10
8	20	30	14
8	30	24	10
8	30	20	14
8	40	14	10
8	40	10	14
8	50	8	10
8.5	20	30	14
8.5	30	24	10
8.5	30	20	14
8.5	40	14	10
8.5	40	10	14
8.5	50	8	10

4 Core 25 mm2 LVABC over road (A) and untrafficked land (B)

Span A: Over Road

Span B: Over Untrafficked Land

Fascia attachment height (h): 3 m and greater

Service Pole attachment height (h): 6.5 m

Note:

- Max Span A length to allow separate construction or disconnection of Span B is 30 m
- Max Span B length before exceeding 1 kN facia attachment limit is 33 m
- Max Span B length before exceeding clearance over untrafficked areas is 33 m
- For Angles of Deviation greater than 60º, consult *TasNetworks*.
- Flat ground has been assumed

H (m)	Ang of Dev Up to (Deg)	Span A Up to (m)	Span B Up to (m)
5.5	10	20	33
5.5	20	20	33
5.5	50	8	10
6	10	28	33
6	20	28	30
6	20	25	33
6	50	8	10
6.5	10	30	33
6.5	20	28	30
6.5	20	27	33
6.5	50	8	10
7	10	30	33
7	20	28	30
7	20	27	33
7	50	8	10

H (m)	Ang of Dev Up to (Deg)	Span A Up to (m)	Span B Up to (m)
7.5	10	30	33
7.5	20	28	30
7.5	20	27	33
7.5	50	8	10
8	10	30	33
8	20	28	30
8	20	27	33
8	50	8	10
8.5	10	30	33
8.5	20	28	30
8.5	20	27	33
8.5	50	8	10

Appendix G Service attachment

Customer installed service attchments must comply with the more onerous of AS/NZS 3000 or AS/NZS 7000.

Drawings D-OH1-0688-SD-001 and D-OH1-0689-SD-001 below show examples of service risers in use. These were designed to AS 3000 and are included here to show types of risers which are acceptable to *TasNetworks*.

Drawings D-OH1-0690-SD-001 and D-OH1-0691-SD-001 show service brackets in use which were designed to AS 3000.

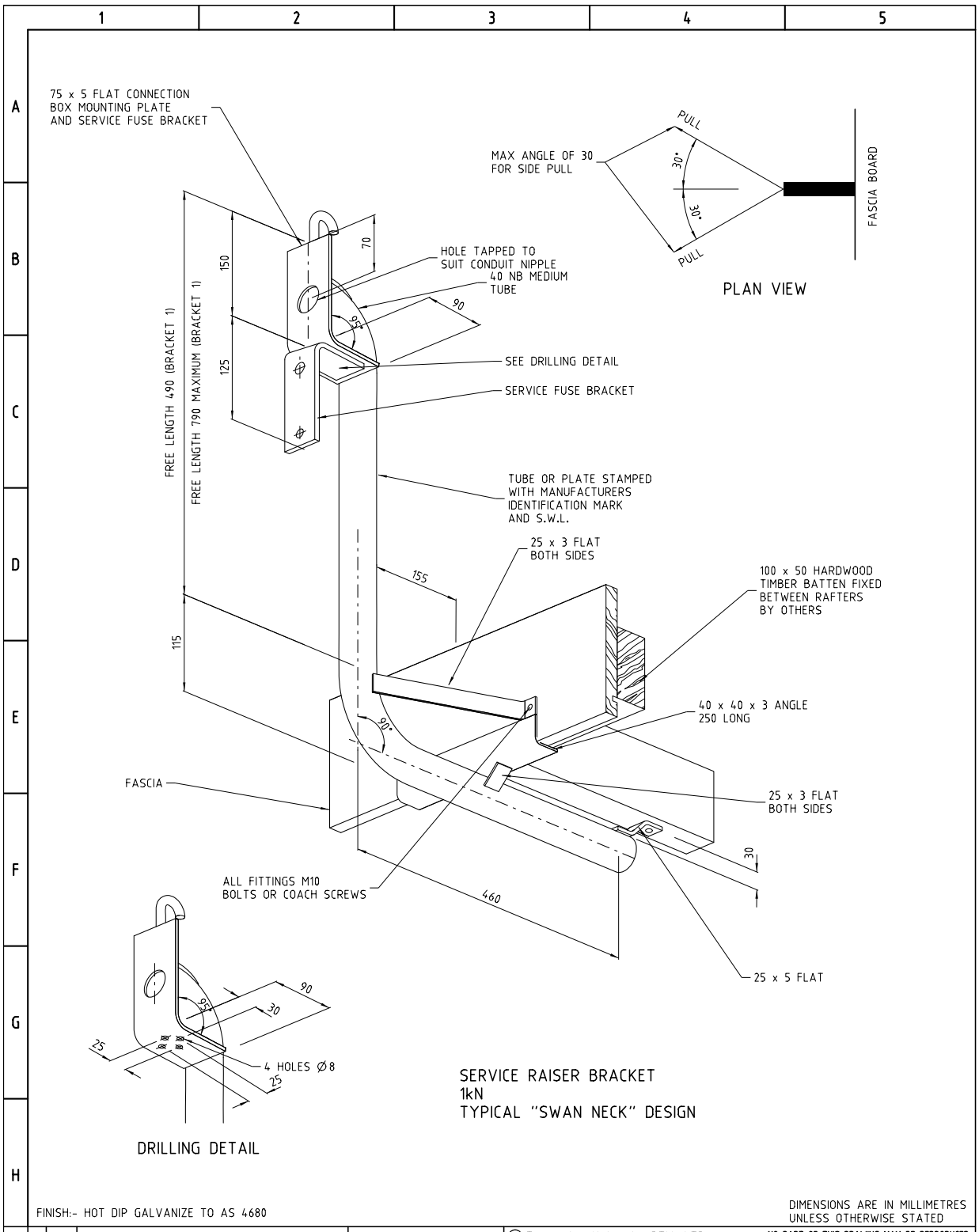
75 x 5 FLAT CONNECTION BOX MOUNTING PLATE AND SERVICE FUSE BRACKET
MAX ANGLE OF 30 FOR SIDE PULL
PULL
30°
30°
PULL
FASCIA BOARD
PLAN VIEW
HOLE TAPPED TO SUIT CONDUIT NIPPLE 40 NB MEDIUM TUBE
70
150
125
90
95°
SEE DRILLING DETAIL
SERVICE FUSE BRACKET
FREE LENGTH 490 (BRACKET 1)
FREE LENGTH 790 MAXIMUM (BRACKET 1)
TUBE OR PLATE STAMPED WITH MANUFACTURERS IDENTIFICATION MARK AND S.W.L.
25 x 3 FLAT BOTH SIDES
155
100 x 50 HARDWOOD TIMBER BATTEN FIXED BETWEEN RAFTERS BY OTHERS
115
40 x 40 x 3 ANGLE 250 LONG
90°
FASCIA
25 x 3 FLAT BOTH SIDES
30
ALL FITTINGS M10 BOLTS OR COACH SCREWS
460
25 x 5 FLAT
90
95°
30
25
4 HOLES Ø8
25
DRILLING DETAIL
SERVICE RAISER BRACKET
1kN
TYPICAL "SWAN NECK" DESIGN
FINISH:- HOT DIP GALVANIZE TO AS 4680
DIMENSIONS ARE IN MILLIMETRES UNLESS OTHERWISE STATED
ALTERATIONS
ORIGINAL ISSUE
REPRODUCED FROM DRG No. D-OH1-1.6/16
TasNetworks
DRAWN C5 PRO-SOLUTIONS
DESIGNED BY TASNETWORKS
CHECKED BY C5 PRO-SOLUTIONS
APPROVED BY TASNETWORKS
DATE APPROVED 30/MAR/17
© Tasmanian Networks PTY. LTD. trading as TasNetworks
ABN: 24 167 357 299
NO PART OF THIS DRAWING MAY BE REPRODUCED, STORED IN A RETRIEVAL SYSTEM IN ANY FORM, OR TRANSMITTED BY ANY MEANS WITHOUT THE PRIOR PERMISSION OF TASNETWORKS
TITLE
O/H SERVICES & CONSUMERS MAINS
STANDARD SERVICE RAISER BRACKETS
SCALE
NTS
A4
D - OH1 - 0688 - SD - 001
REVISION
A

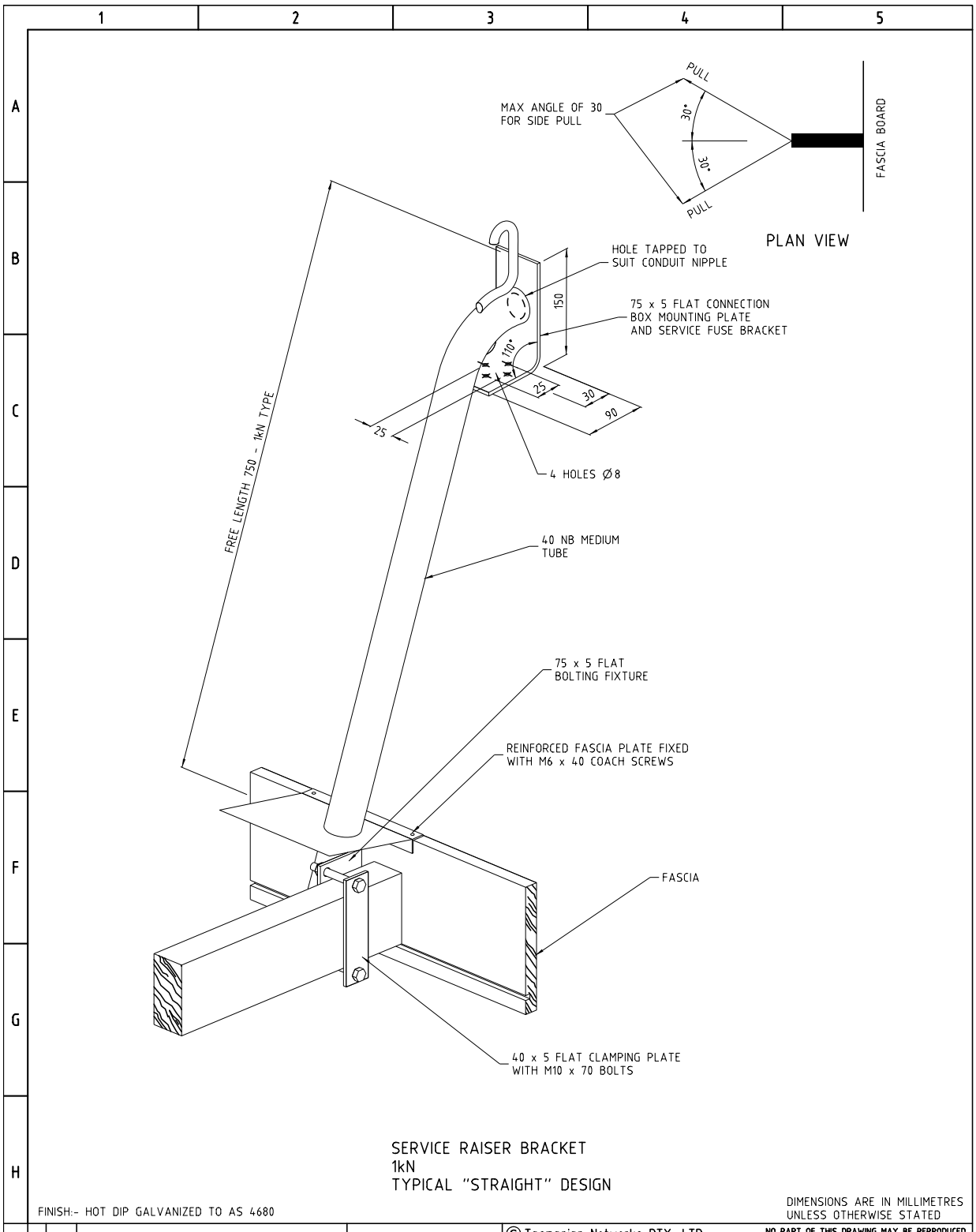

SERVICE RAISER BRACKET
1kN
TYPICAL "STRAIGHT" DESIGN

FINISH:- HOT DIP GALVANIZED TO AS 4680

DIMENSIONS ARE IN MILLIMETRES
UNLESS OTHERWISE STATED

ALTERATIONS
ORIGINAL ISSUE
REPRODUCED FROM
DRG No. D-OH1-1.6/17

TasNetworks

DRAWN	C5 PRO-SOLUTIONS
DESIGNED BY	TASNETWORKS
CHECKED BY	C5 PRO-SOLUTIONS
APPROVED BY	TASNETWORKS
DATE APPROVED	30/MAR/17

© Tasmanian Networks PTY. LTD.
trading as TasNetworks
ABN: 24 167 357 299

NO PART OF THIS DRAWING MAY BE REPRODUCED, STORED IN A RETRIEVAL SYSTEM IN ANY FORM, OR TRANSMITTED BY ANY MEANS WITHOUT THE PRIOR PERMISSION OF TASNETWORKS

TITLE
O/H SERVICES & CONSUMERS MAINS
STANDARD SERVICE RAISER BRACKETS

SCALE
NTS

A4

D - OH1 - 0689 - SD - 001

REVISION
A

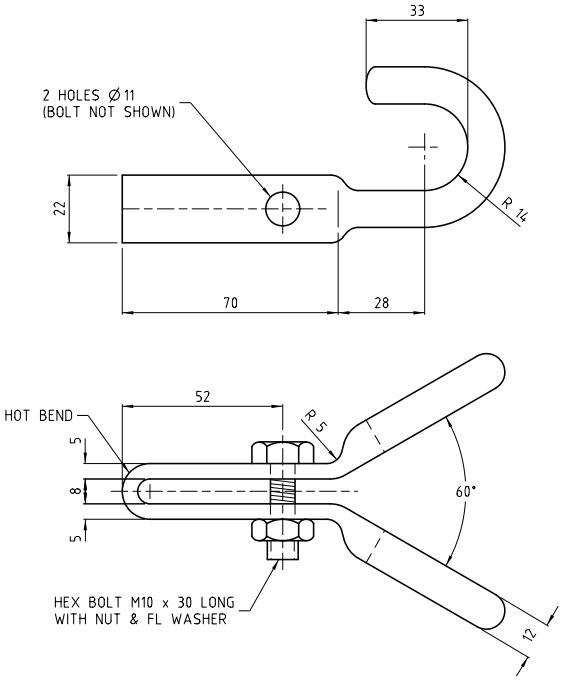

SERVICE BRACKET - TYPE 1

S.I. No 32.37.55

FINISH:- HOT DIP GALVANISE TO AS 4680

DIMENSIONS ARE IN MILLIMETRES
UNLESS OTHERWISE STATED

ALTERATIONS

ORIGINAL ISSUE

REPRODUCED FROM
DRG No. D-OH1-1.6/18

TasNetworks

DRAWN	C5 PRO-SOLUTIONS
DESIGNED BY	TASNETWORKS
CHECKED BY	C5 PRO-SOLUTIONS
APPROVED BY	TASNETWORKS
DATE APPROVED	04/APR/17

© Tasmanian Networks PTY. LTD.
trading as TasNetworks
ABN: 24 167 357 299

NO PART OF THIS DRAWING MAY BE REPRODUCED, STORED IN A RETRIEVAL SYSTEM IN ANY FORM, OR TRANSMITTED BY ANY MEANS WITHOUT THE PRIOR PERMISSION OF TASNETWORKS

TITLE
O/H SERVICES & CONSUMERS MAINS
SERVICE FITTINGS

SCALE 1:2

A4

D - OH1 - 0690 - SD - 001

REVISION A

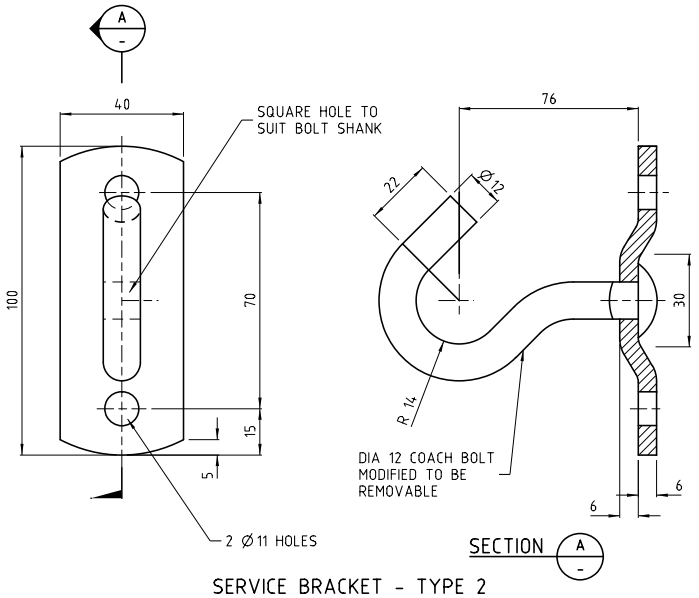

SERVICE BRACKET - TYPE 2
HOUSE END
MATERIAL: COACH BOLT TO AS/NZS 1390 - M12 x (SUITABLE LENGTH)-4.6
40 x 6 FLAT BAR TO AS/NZS 3679.1-300
S.I. No 32.37.44

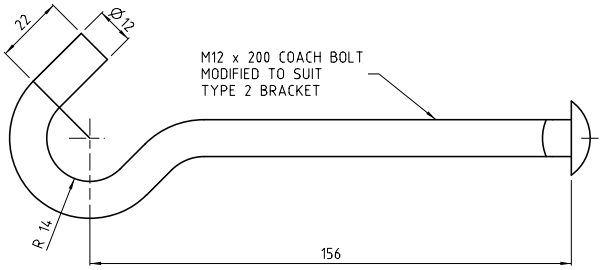

LONG BOLT OPTION
TYPE 2 BRACKET
MATERIAL: COACH BOLT TO AS/NZS 1390 - M12 x (SUITABLE LENGTH)-4.6
S.I. No 32.37.50

FINISH:- HOT DIP GALVANIZE TO AS 4680

DIMENSIONS ARE IN MILLIMETRES
UNLESS OTHERWISE STATED

ALTERATIONS
ORIGINAL ISSUE
REPRODUCED FROM
DRG No. D-OH1-1.6/19

TasNetworks

DRAWN	C5 PRO-SOLUTIONS
DESIGNED BY	TASNETWORKS
CHECKED BY	C5 PRO-SOLUTIONS
APPROVED BY	TASNETWORKS
DATE APPROVED	04/APR/17

© Tasmanian Networks PTY. LTD.
trading as TasNetworks
ABN: 24 167 357 299

NO PART OF THIS DRAWING MAY BE REPRODUCED, STORED IN A RETRIEVAL SYSTEM IN ANY FORM, OR TRANSMITTED BY ANY MEANS WITHOUT THE PRIOR PERMISSION OF TASNETWORKS

TITLE
O/H SERVICES & CONSUMERS MAINS
SERVICE FITTINGS

SCALE 1:2

A4

D - OH1 - 0691 - SD - 001

REVISION A

Appendix H Overhead supply to underground consumer mains

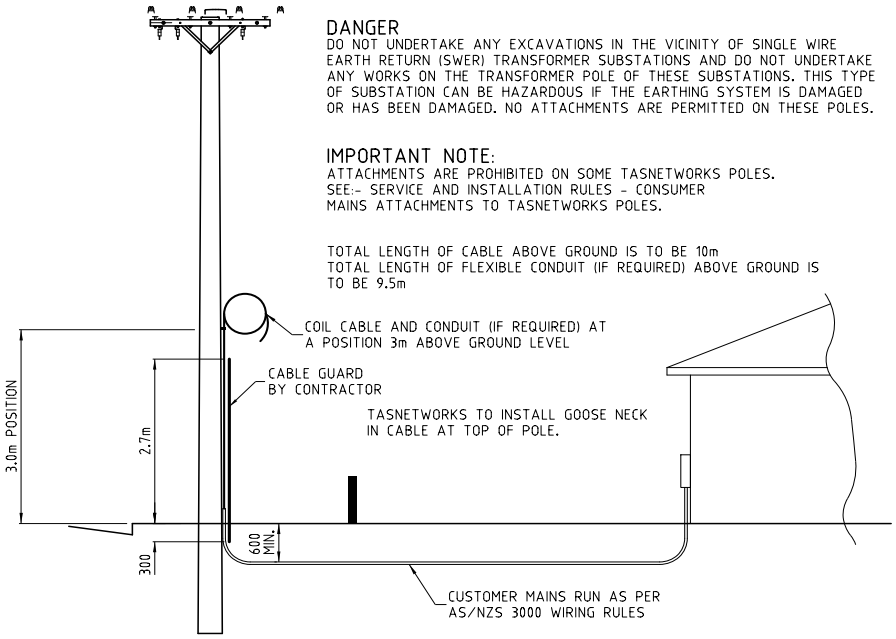

DANGER
DO NOT UNDERTAKE ANY EXCAVATIONS IN THE VICINITY OF SINGLE WIRE EARTH RETURN (SWER) TRANSFORMER SUBSTATIONS AND DO NOT UNDERTAKE ANY WORKS ON THE TRANSFORMER POLE OF THESE SUBSTATIONS. THIS TYPE OF SUBSTATION CAN BE HAZARDOUS IF THE EARTHING SYSTEM IS DAMAGED OR HAS BEEN DAMAGED. NO ATTACHMENTS ARE PERMITTED ON THESE POLES.

IMPORTANT NOTE:
ATTACHMENTS ARE PROHIBITED ON SOME TASNETWORKS POLES.
SEE:- SERVICE AND INSTALLATION RULES - CONSUMER MAINS ATTACHMENTS TO TASNETWORKS POLES.

TOTAL LENGTH OF CABLE ABOVE GROUND IS TO BE 10m
TOTAL LENGTH OF FLEXIBLE CONDUIT (IF REQUIRED) ABOVE GROUND IS TO BE 9.5m

CONDUIT NOTES:
- CONDUIT IS REQUIRED FOR CABLES 50mm AND LESS (EXCEPT XLPE CABLES)
- CONDUIT IS TO EXTEND FROM BASE OF POLE
- CORRUGATED CONDUIT IS NOT TO BE USED

CABLE NOTES:
- MAXIMUM ALLOWABLE CABLE SIZE AND NUMBER OF CONDUCTORS (EXISTING AND PROPOSED)
  TASNETWORKS POLE ON PUBLIC LAND:
  - 1 SET OF 150mm OR 240mm, 1 PHASE OR 3 PHASE OR
  - 2 SETS OF UP TO AND INCLUDING 120mm, 1 PHASE OR 3 PHASE
  - 1 CABLE PER PHASE
  TASNETWORKS POLE ON PRIVATE LAND:
  - 1 SET OF UP TO AND INCLUDING 240mm IN PARALLEL, 1 PHASE OR 3 PHASE
- PHASE AND NEUTRAL IDENTIFICATION BY COLOURED CABLE OR UV STABILISED HEATSHRINK
- MAXIMUM EXCAVATION TRENCH DIMENSION NEAR POLE TO BE 350mm WIDE X 700mm DEEP X 1500mm LENGTH.

ATTACHMENT OF CONDUIT, CABLES AND CABLE GUARD:
- CABLE OR CONDUIT IS TO BE FIXED AT 1 M INTERVALS UP TO A POSITION 3m ABOVE GROUND LEVEL
- FIXING VIA GALVANISED SELF-TAPPING SCREWS OR SIMILAR
- NO HOLES GREATER THAN 6mm DIA IN STEEL POLES
- NO MORE THAN 2 HOLES IN THE SAME PLANE ON STEEL POLES
- UNUSED HOLES IN STEEL POLES ARE TO BE SEALED
- NO CONSUMER'S MAINS CABLE INSIDE AN TASNETWORKS POLE

CONTRACTOR TO PROVIDE:
- A FULLY COMPLETED TASNETWORKS FORM (P) - "INDEMNITY FOR INSTALLATION OF CONSUMER'S MAINS ON TASNETWORKS POLE" TOGETHER WITH THE EWR WHEN REQUESTING ENERGISATION/CONNECTION.
- COLOUR-CODED CABLE IN FLEXIBLE CONDUIT (IF REQUIRED) ATTACHED TO POLE UP TO 3m ABOVE GROUND
- CABLE GUARD ATTACHED TO POLE
- CABLE SADDLES FOR TASNETWORKS USE
- CONSUMER'S MAINS CABLE INSTALLED TO AS/NZS 3000

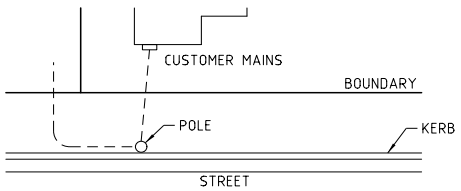

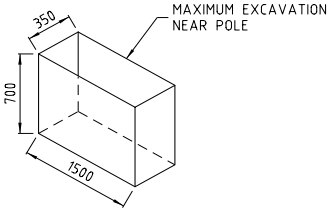

REFER TO NOTES ON DRG. D-OH1-0367-SD-002

DIMENSIONS ARE IN MILLIMETRES UNLESS OTHERWISE STATED

ALTERATIONS
ORIGINAL ISSUE
REPRODUCED FROM DRG No. D-OH1-1.6/36

TasNetworks

DRAWN	CS PRO-SOLUTIONS
DESIGNED BY	TASNETWORKS
CHECKED BY	CS PRO-SOLUTIONS
APPROVED BY	TASNETWORKS
DATE APPROVED	23/MAR/17

© Tasmanian Networks PTY. LTD.
trading as TasNetworks
ABN: 24 167 357 299

NO PART OF THIS DRAWING MAY BE REPRODUCED, STORED IN A RETRIEVAL SYSTEM IN ANY FORM, OR TRANSMITTED BY ANY MEANS WITHOUT THE PRIOR PERMISSION OF TASNETWORKS

TITLE
O/H SERVICES & CONSUMERS MAINS
UNDERGROUND SERVICE

SCALE NTS

A4

D - OH1 - 0366 - SD - 001

REVISION A

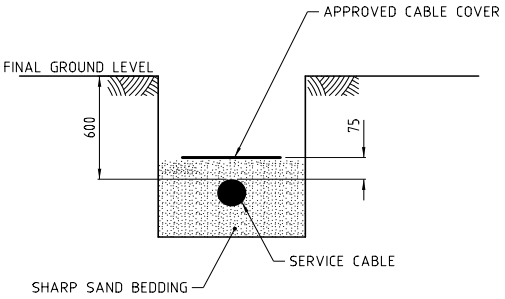

TYPICAL CROSS SECTION ON STREET PROPERTY

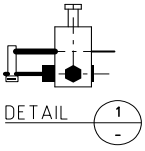

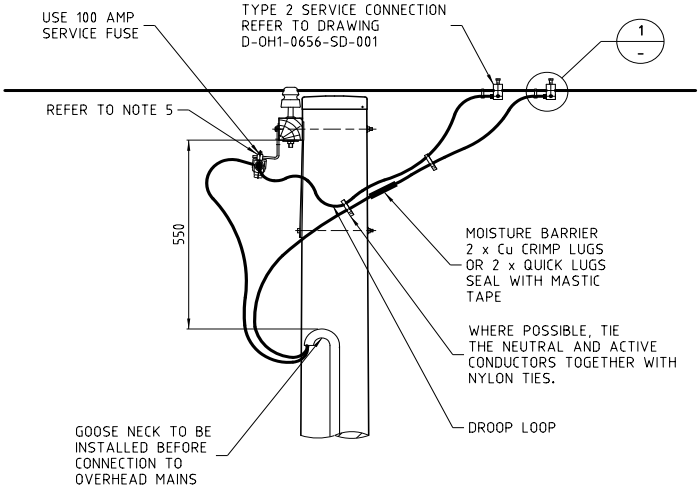

POLE TOP ARRANGEMENT

REFER TO NOTES ON DRG D-OH1-0367-SD-002

DIMENSIONS ARE IN MILLIMETRES
UNLESS OTHERWISE STATED

ALTERATIONS

ORIGINAL ISSUE

REPRODUCED FROM
DRG No. D-OH1-1,6/37

TasNetworks

DRAWN	CS PRO-SOLUTIONS
DESIGNED BY	TASNETWORKS
CHECKED BY	CS PRO-SOLUTIONS
APPROVED BY	TASNETWORKS
DATE APPROVED	23/MAR/17

© Tasmanian Networks PTY. LTD.
trading as TasNetworks
ABN: 24 167 357 299

NO PART OF THIS DRAWING MAY BE REPRODUCED, STORED IN A RETRIEVAL SYSTEM IN ANY FORM, OR TRANSMITTED BY ANY MEANS WITHOUT THE PRIOR PERMISSION OF TASNETWORKS

TITLE
O/H SERVICES & CONSUMERS MAINS
UNDERGROUND SERVICE
LESS THAN 100 AMPS/PHASE

SCALE NTS

A4

D - OH1 - 0367 - SD - 001

REVISION A

NOTES

1. THIS DRAWING COVERS THE SITUATION WHERE:-
   A) SUPPLY IS PROVIDED BY MEANS OF AN OVERHEAD SYSTEM.
   B) A CUSTOMER REQUESTS THAT SUPPLY BE PROVIDED UNDERGROUND.
   C) THE LOAD IS LESS THAN 100 AMPS PER PHASE.
   D) THE SUPPLY IS TO BE CONNECTED TO AN TASNETWORKS POLE IN A PUBLIC ROADWAY.

   UNDERGROUND CUSTOMERS MAINS SHALL BE INSTALLED IN THIS INSTANCE BY THE CUSTOMER.

2. DELETED.

3. REFER TO SECTION 1.6 OF UNDERGROUND CABLE DESIGN AND CONSTRUCTION MANUAL FOR DETAILS OF DESIGN AND CONSTRUCTION.

4. CUSTOMER'S MAINS CABLE IS TO BE PROTECTED AGAINST WEATHER AND DAMPNESS IN ACCORDANCE WITH AS 3000. ELECTRICAL CONTRACTOR IS TO PROTECT THE CABLE TAILS WHERE NECESSARY WITH HEAT SHRINK MATERIAL OR EQUIVALENT. (NOTE : CORRUGATED CONDUIT IS NOT ALLOWED ON TASNETWORKS POLES).

5. USE SERVICE FUSE FITTING S.J. No 22.17.60 FOR CUSTOMER'S MAINS CABLE SIZE TO 35mm². 160A LVABC SW/FUSE (S.J. NO 23.62.41) FOR CUSTOMERS MAINS CABLE SIZE LARGER THAN 35mm².

6. THE NUMBER OF INSTALLATIONS CONNECTED ON ANY ONE POLE SHOULD NOT EXCEED THREE X 3 PHASE.

7. POLE MUST BE ON THE SAME SIDE OF THE ROAD AS THE PROPERTY AND WITHIN NOMINALLY 10M OF POINT OF ENTRY TO PROPERTY.

8. LEAVE 1.2 METRES EXTRA CABLE, IN FLEXIBLE HOSE-TYPE CONDUIT, COILED HORIZONTALLY NEAR THE BASE OF THE POLE TO ALLOW FOR FUTURE POLE RELOCATION.

REFERENCE DRAWINGS
D-OH1-0366-SD-001 & D-OH1-0367-SD-001

DIMENSIONS ARE IN MILLIMETRES UNLESS OTHERWISE STATED

ALTERATIONS
ORIGINAL ISSUE
REPRODUCED FROM DRG No. D-OH1-1.6/38
NOTE 2 DELETED

REV	PROJECT	DESIGNED BY	DRAWN BY	DATE	DATE	DATE
B		N. JAMES	M.L.A.TD	26-Mar-19		02-Apr-19

TasNetworks

DRAWN	CS PRO-SOLUTIONS
DESIGNED BY	TASNETWORKS
CHECKED BY	CS PRO-SOLUTIONS
APPROVED BY	TASNETWORKS
DATE APPROVED	25/MAR/19

© Tasmanian Networks PTY. LTD. trading as TasNetworks
ABN: 24 167 357 299

NO PART OF THIS DRAWING MAY BE REPRODUCED, STORED IN A RETRIEVAL SYSTEM IN ANY FORM, OR TRANSMITTED BY ANY MEANS WITHOUT THE PRIOR PERMISSION OF TASNETWORKS

TITLE
D/H SERVICES & CONSUMER MAINS
LOADS LESS THAN 100 AMPS/PHASE
GENERAL NOTES

SCALE NTS

A4

D - OH1 - 0367 - SD - 002

REVISION B

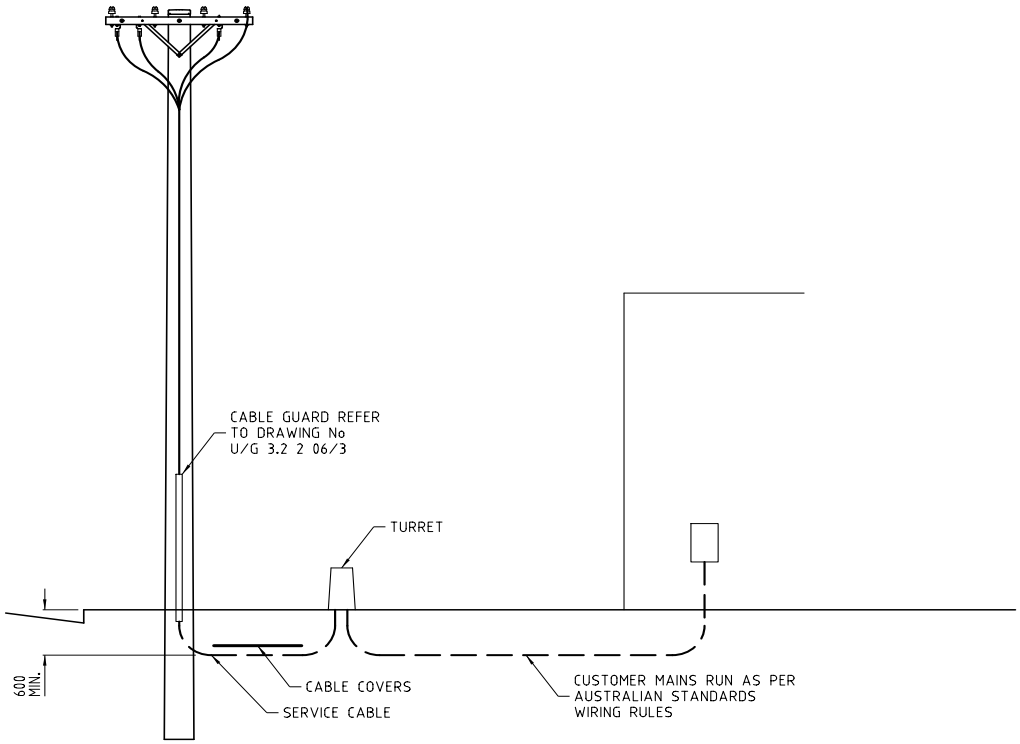

SECTION OF TYPICAL RUN

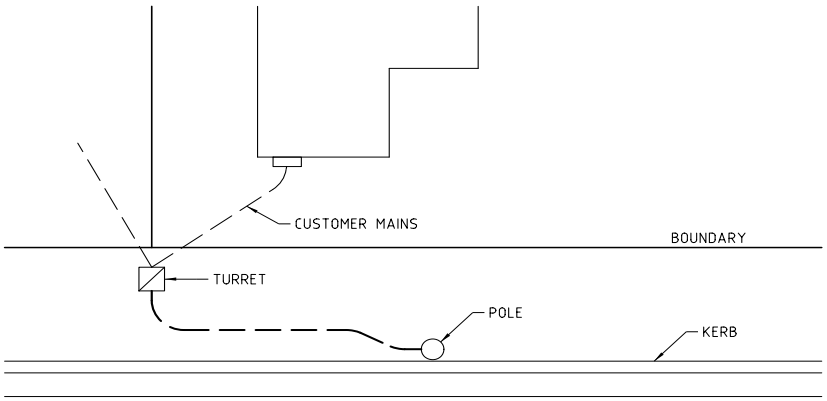

PLAN OF TYPICAL RUN

REFER TO NOTES ON DRG D-OH1-0368-SD-003

DIMENSIONS ARE IN MILLIMETRES
UNLESS OTHERWISE STATED

ALTERATIONS

ORIGINAL ISSUE

REPRODUCED FROM
DRG No. D-OH1-1.6/39

TasNetworks

DRAWN	CS PRO-SOLUTIONS
DESIGNED BY	TASNETWORKS
CHECKED BY	CS PRO-SOLUTIONS
APPROVED BY	TASNETWORKS
DATE APPROVED	23/MAR/17

© Tasmanian Networks PTY. LTD.
trading as TasNetworks
ABN: 24 167 357 299

NO PART OF THIS DRAWING MAY BE REPRODUCED, STORED IN A RETRIEVAL SYSTEM IN ANY FORM, OR TRANSMITTED BY ANY MEANS WITHOUT THE PRIOR PERMISSION OF TASNETWORKS

TITLE
O/H SERVICES & CONSUMERS MAINS
UNDERGROUND SERVICE
LOADS MORE THAN 100 AMPS/PHASE

SCALE
N.T.S.

A4

D - OH1 - 0368 - SD - 001

REVISION
A

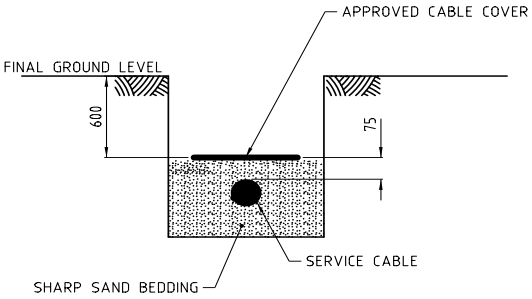

TYPICAL CROSS SECTION ON STREET PROPERTY

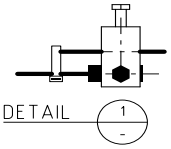

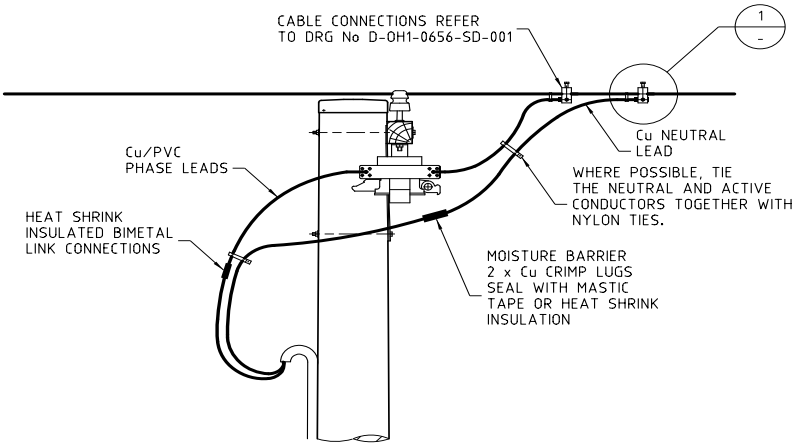

POLE TOP ARRANGEMENT

REFER TO NOTES ON DRG D-OH1-0368-SD-003

DIMENSIONS ARE IN MILLIMETRES
UNLESS OTHERWISE STATED

ALTERATIONS

ORIGINAL ISSUE

REPRODUCED FROM
DRG No. D-OH1-1.6/40

TasNetworks

DRAWN	CS PRO-SOLUTIONS
DESIGNED BY	TASNETWORKS
CHECKED BY	CS PRO-SOLUTIONS
APPROVED BY	TASNETWORKS
DATE APPROVED	23/MAR/17

© Tasmanian Networks PTY. LTD.
trading as TasNetworks
ABN: 24 167 357 299

NO PART OF THIS DRAWING MAY BE REPRODUCED, STORED IN A RETRIEVAL SYSTEM IN ANY FORM, OR TRANSMITTED BY ANY MEANS WITHOUT THE PRIOR PERMISSION OF TASNETWORKS

TITLE
O/H SERVICES & CONSUMERS MAINS
UNDERGROUND SERVICE
LOADS MORE THAN 100 AMPS/PHASE

SCALE
NTS

A4

D - OH1 - 0368 - SD - 002

REVISION
A

NOTES

1. THIS DRAWING COVERS THE SITUATION WHERE:-

   (A) SUPPLY IS PROVIDED BY MEANS OF AN OVERHEAD SYSTEM
   (B) A CUSTOMER REQUESTS THAT SUPPLY BE PROVIDED UNDERGROUND
   (C) THE LOAD IS GREATER THAN 100 AMPS PER PHASE 3 PHASE
   (D) THE SUPPLY IS TO BE CONNECTED TO AN TASNETWORKS POLE IN A PUBLIC ROADWAY.

   UNDERGROUND SERVICE CABLE IS PREFERRED IN THIS INSTANCE.

2. REFER TO SECTION 1.6 OF UNDERGROUND CABLE DESIGN AND CONSTRUCTION MANUAL FOR DETAILS OF DESIGN AND CONSTRUCTION.

3. THE CUSTOMER'S TERMINALS MAY BE LOCATED IN A TURRET, SERVICE FUSE BOX, SERVICE FUSE CABINET OR PILLAR.

4. DELETED.

5. UNDERGROUND CUSTOMERS MAINS MAY BE INSTALLED ON PRIVATE POLES AND TASNETWORKS TRANSFORMER POLES INSTALLED ON PRIVATE PROPERTY.

   ENSURE THAT CUSTOMERS MAINS CABLE IS ADEQUATELY PROTECTED AGAINST MECHANICAL DAMAGE, WEATHER AND DAMPNESS IN ACCORDANCE WITH AUSTRALIAN STANDARDS WIRING RULES(AS 3000).
   ELECTRICAL CONTRACTOR IS TO PROTECT THE CABLE TAILS WHERE NECESSARY WITH HEAT SHRINK MATERIAL OR EQUIVALENT.
   FLEXIBLE HOSE TYPE CONDUIT IS ACCEPTABLE (NOT CORRUGATED CONDUIT).

6. SERVICE CABLE MAY CROSS ROADWAY TO POLE ON OPPOSITE SIDE.

7. LEAVE 1.2 METRES EXTRA CABLE, IN FLEXIBLE HOSE TYPE CONDUIT, COILED HORIZONTALLY NEAR THE BASE OF THE POLE TO ALLOW FOR FUTURE POLE RELOCATION.

DIMENSIONS ARE IN MILLIMETRES UNLESS OTHERWISE STATED

ALTERATIONS

REV	NOTES
	ORIGINAL ISSUE
	REPRODUCED FROM DRG No. D-OH1-1.6/41
B	NOTES MODIFIED AND NOTE 4 DELETED.

TasNetworks

DRAWN	CS PRO-SOLUTIONS
DESIGNED BY	TASNETWORKS
CHECKED BY	CS PRO-SOLUTIONS
APPROVED BY	TASNETWORKS
DATE APPROVED	25/MAR/13

© Tasmanian Networks PTY. LTD. trading as TasNetworks ABN: 24 167 357 299

NO PART OF THIS DRAWING MAY BE REPRODUCED, STORED IN A RETRIEVAL SYSTEM IN ANY FORM, OR TRANSMITTED BY ANY MEANS WITHOUT THE PRIOR PERMISSION OF TASNETWORKS

TITLE
O/H SERVICES & CONSUMER MAINS
UNDERGROUND SERVICE
LOADS MORE THAN 100 AMPS/PHASE

SCALE NTS

A4

D - OH1 - 0368 - SD - 003

REVISION B